INSTRUCTION MANUAL

system 1010

WAVEFORM ANALYZER

EH research laboratories, inc.

Digitized by the Internet Archive
in 2024

https://archive.org/details/manualsplus_03322

INSTRUCTION MANUAL

system 1010

WAVEFORM ANALYZER

Serial Number _____

August 1975

research laboratories, inc.

515 11th Street □ Box 1289, Oakland, California 94604 □ (415)834-3030 □ TWX 910-366-7258
In Europe: E-H Research Laboratories (Ned) B.V., Box 1018, Eindhoven, The Netherlands, Telex 51116
In Japan: E-H International – Tokyo Branch, 1-5, 3-Chome, Naka-cho, Musashino-shi, Tokyo, Japan □ 0422-54-9261

(B)

148-07203

INSTRUMENT WARRANTY

All E-H/AMC products are warranted for a period of one year from date of delivery. These products are warranted to be free from defects in material and workmanship, suitable for normal use and service under normal conditions, and able to meet any applicable specifications accepted in writing by E-H/AMC. No claim under the warranty will be accepted unless it is made in writing to E-H/AMC immediately after discovery of defect or in any case, within one year of delivery. No other warranty, express or implied exists outside this warranty. E-H/AMC is not liable for any commercial losses or other consequential damages incurred or sustained as a result of any defective or nonconforming product. E-H/AMC's obligation with respect to losses is limited, under this warranty, at E-H/AMC's option, either to the replacement (by delivery F.O.B. Oakland, California) or repair of its manufactured products which prove to be defective or nonconforming. This warranty does not apply to any products improperly applied or used or which have been subjected to intentional or negligent misuse or accident, or which have been in any way modified by others without the express written agreement of E-H/AMC. Any product claimed to be defective during the warranty period must be returned to an authorized E-H/AMC repair center, with transportation charges prepaid. The product will be repaired and returned to the purchaser with return transportation prepaid by E-H/AMC. If no defect in the product is found, or if failure is due to misuse or accident, such product will be returned to the purchaser with repair and transportation charges billed collect.

For in-warranty repair of this instrument, contact E-H Research Laboratories, Inc., Customer Service Department and provide:

a. Instrument model number and serial number.

b. Details concerning the nature of the malfunction.

Shipping instructions, or repair information and parts will be sent to you promptly.

TABLE OF CONTENTS

Section		Page
1	SPECIFICATIONS	
	1-1 How To Use This Instruction Manual	1-1
	1-2 General Information	1-1
	1-3 Specifications System 1010	1-2
	1-4 Introduction Type 941 RSU	1-2
	1-5 Specifications Type 941 RSU	1-2
	1-6 Optional Accessories For Type 941 RSU	1-3
	1-7 Introduction Type 942 RSU	1-3
	1-8 Specifications Type 942 RSU	1-4
	1-9 Introduction Model 1011 Multiplexer	1-4
	1-10 Specifications Model 1011	1-4
	1-11 Additional Types of RSU	1-4
2	OPERATING INFORMATION	
	2-1 General Information	2-1
	2-2 Installation	2-1
	2-3 Front Panel Controls And Indicators	2-2
	2-4 Programming And Interface Considerations	2-3
	2-5 Programming The System 1010	2-9
	2-6 First Time Turn-On	2-11
	2-7 Typical Measurements	2-12
	2-8 Differential Time Measurements	2-14
	2-9 Phase Shift Measurements	2-14
	2-10 Warning Indications	2-14
	2-11 Automatic Waveform Analysis	2-14
	2-12 Time Measurements: Fast Reference Method	2-16
	2-13 Installation Model 1011	2-16
	2-14 Front Panel Controls and Indicators Model 1011	2-17
	2-15 Programming and Interface Considerations Model 1011	2-17
3	THEORY OF OPERATION	
	3-1 Sampling Technique	3-1
	3-2 Basic Sampling System	3-1
	3-3 Overall Circuit Description	3-3
	3-4 Circuit Description Model 1011	3-11
4	MAINTENANCE	
	4-1 General Information	4-1
	4-2 Performance Verification	4-1
	4-3 Calibration Procedure	4-5
	4-4 Remote Sampling Unit (Probe) Calibration	4-8
	4-5 Performance Verification Model 1011	4-10
	4-6 Calibration Procedure Model 1011	4-12
	4-7 Recommended Spare Parts	4-12
5	PARTS LIST	
	5-1 Ordering Information	5-1
	5-2 How To Use This Parts List	5-1
	5-3 Major Assemblies	5-1
6	DRAWINGS	
	6-1 General Information	6-1
	6-2 Schematic Diagrams	6-1
A	APPENDIX	A-1
	A-1 General	A-1

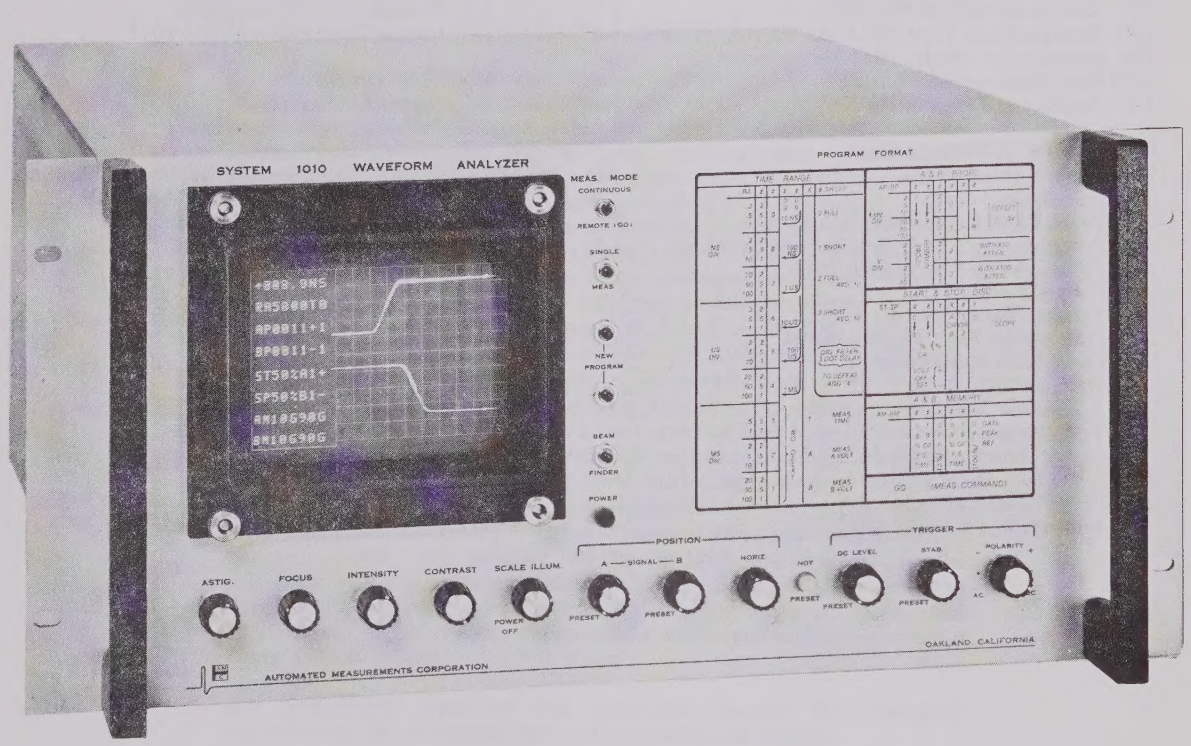

Figure 1-1 System 1010 Waveform Analyzer.

SECTION 1
SPECIFICATIONS

1-1 HOW TO USE THIS INSTRUCTION MANUAL

Each section of this manual begins with a general description of the instrument oriented toward the subject matter in that section. Section 1 contains the electrical and mechanical specifications for the instrument. For the operator, Section 2 contains a complete description of controls and procedures. In Section 3, the theory of operation is described.

The schematics are located at the back of the manual. Section 6, in which the schematics are located, also contains assembly drawings of the printed circuit boards and other subassemblies. Individual components are identified on these drawings. For purposes of replacement, components and subassemblies are completely described in the parts lists in Section 5.

Section 4 contains maintenance and alignment procedures. It is strongly recommended that the repair technician read Section 3 and become familiar with the location of the various types of information in this manual before attempting any of the procedures in Section 4. Techniques are oriented strongly toward preventive maintenance and include routine visual checks, voltage and signal tests, and general notes on the use of test equipment with this instrument.

Units covered in Sections 5 and 6 of the basic manual are current production units, and have a redesigned display logic (A6) board. They are sometimes referred to as "NEW UNITS" in Sections 1 through 4.

Appendix A covers *only* units which have a modified older display logic (A6) board. They are sometimes referred to (in the main part of the manual) as "OLD UNITS". Use the parts lists, board drawings and schematics in Appendix A only if your units was made before approximately May 1975.

1-2 GENERAL INFORMATION

The Automated Measurements Corporation System 1010 is a dual-channel digital waveform analyzer bringing second-generation accuracy, dynamic range, speed of measurement and convenience to programmable sampling oscilloscopes. The analog waveforms, digital readout and stored program information are displayed on the CRT. Completely programmable functions plus this unique CRT display eliminate nixie tubes, knobs and thumbwheel switches.

Programming is achieved by means of a keyboard, computer or tape reader providing ASCII outputs. "Convenience group" knobs remaining on the front panel provide for CRT beam control (intensity, contrast, etc.), vernier position and trigger adjustments. The trigger and vernier position controls have detented preset positions for normal operation. The program format is printed in tabular form on the front panel, so that the System 1010 can be operated manually through a keyboard with the facility of oscilloscopes having conventional knobs and switches.

The basic System 1010 operates with two remote sampling probes to give digital readout of volts, or time between two points on either channel, or time relationships between two channels. Optional probe multiplexers expand this capability up to 100 channels, still programmed through the System 1010.

The CRT display consists of the dual-trace analog waveforms on a 10 x 10 grid, plus a 64 character alpha-numeric display in 8 lines of 8 characters each. The first line is reserved for the digital readout with polarity, units and overrange indicated. The remaining 7 lines display the 7 program words stored in the System 1010 shift registers. The character generator can display 64 ASCII characters, although some of these are not used in valid program words.

In the continuous measurement mode the CRT beam is preempted between measurement cycles to refresh the data display. The refresh cycle takes 12.3 ms, so that flicker is no problem for most measurements. In the Remote/Go or single measurement mode the DRO/Program is continuously displayed until a measurement command is received, in the form of a Go command from a computer or keyboard or by manually depressing the single measurement button. This command takes priority, interrupting data display immediately to initiate a new measurement. When the single measurement is complete, the System 1010 flags the controlling computer and reverts to a continuous display of DRO/Program until another command is received. In this mode average-of-ten measurements can be made on slow waveforms without annoying flicker of the DRO.

Speed of measurement depends on signal repetition frequency, maximum sampling rate, measurement mode and method of programming. Sampling rates up to 100 kHz in the System 1010 result in short measurement cycles. Continuous measurements alternating with DRO/Program display can be made at rates exceeding 30 per second. Under computer control the program display can be bypassed by the Go command for measurement rates up to 50 per second. In this mode the computer dumps an entirely new program into the System 1010 memory for each measurement without substantially reducing this measurement rate. The keyboard can be used in the edit mode at anytime to edit the program for further examination of a waveform. Any

program word can be edited in this manner without having to reenter a complete new program.

A unique feature of the System 1010 is that a photograph of the CRT display contains all information pertinent to a measurement—the dual trace analog display, the DRO, and the program, revealing which probes are used, the scale factors, and the exact parameter being measured. This serves as a convenient means of recording the performance of a device so that it can be compared with other devices at a later date merely by re-entering the same program.

1-3 SPECIFICATIONS SYSTEM 1010

a. Time Ranges. 0.2 ns/div to 100 ms/div in 2-5-10 sequence (except 0.2 ms/div).

b. Time Accuracy. Digital measurement 1% of full scale ±1 count. Analog display 3% of full scale.

c. Delay. Programmable in 1% increments. 10 divisions on "1" ranges, 20 divisions on "5" ranges, and 50 divisions on "2" ranges.

d. Voltage Ranges. Programmed 2 mV/div to 100 mV/div in 2-5-10 sequence with AMC Type 941 Remote Sampling Unit. 2 mV/div to 10 V/div with high impedance attenuators.

NOTE

In 2mV/div to 10mV/div ranges, vertical POSITION controls may have to be moved out of PRESET.

e. Voltage Accuracy. Digital measurement 2% of full scale ±1 count. Analog display 3% of full scale (excluding attenuator errors).

f. Offset. Programmable ±0.9 V in 0.1 V increments. Manual vernier approx. ±0.1 V with pre-set detent.

g. Sampling Rate. 50 Hz to 100 kHz; real-time sampling up to 0.5 ms/div.

h. Dot Density. 1000 dots full-scale shared by 2 channels.

i. Triggering. Manual Controls.

(1) Input impedance: 50 ohms nominal.

(2) Minimum trigger delay: Approx. 50ns + 2% of full scale of time ranges with "1" multiplier.

(3) Trigger modes: AC or DC + or – slope selection.

(4) Preset Stability and DC level for normal triggering.

(5) AC Trig Risetime: 0.6 μs (maximum).

(6) DC Trig Width: 60 ns (minimum).

(7) Sinusoidal sensitivity: AC mode, 1-100 MHz, 100 mV min. (optimum stability).

(8) DC mode, DC-5 MHz, 200 mV min. (opt. stab. & level).

(9) Trigger jitter: Less than 20 ps to 50 MHz. Less than 50 ps to 500 MHz (optimum trigger level and stability).

(10) Maximum input level: ±5 V.

j. Automatic Unattended Triggering. (Preset).

(1) Trigger pulse width: 5ns (minimum). Edge risetime less than 10 ns. For frequencies above 5 MHz duty cycle less than 20%, and pulse width 5 ns (minimum).

(2) Trigger pulse amp.: 300-800 mV.

(3) Trigger pulse freq.: to 20 MHz.

k. Programmed Functions. Time range, delay, probe selection (in conjunction with probe multiplexers), vertical sensitivity (A and B channels), measurement mode (Time A, B or A-B, A or B volts, full or short sweep, single measurement or average of 10), A and B memories (0 and 100% points, Gated, Peak or Reference, (0% memory chopper)), and start and stop discriminator (measurement start/stop points, channel, slope, and reference voltage level).

l. Power Requirements. 100, 115, or 230 VAC ±10%, 50–60 Hz, 225 V–A.

m. Dimensions. Height 8¾ in. (222 mm); width 19 in. (483 mm); depth 21 in. (533 mm). (22¾ in. including handles).

n. Weight. Net weight 50 lb. (22.7 kg); shipping weight 65 lb. (29.6 kg).

1-4 INTRODUCTION TYPE 941 RSU

The AMC Type 941 Remote Sampling Unit brings new capability to digital waveform analyzers when used with the System 1010. Wide bandwidth, low noise, and compact size make the Type 941 the logical choice for circuit design, transmission line measurements, or component testing. A full range of accessories, including 50-ohm feedthrough adaptor, high-impedance attenuator tips, and 50-ohm termination, adapts the Type 941 to a wide variety of measurement applications.

An efficient sampling circuit gives wide bandwidth and accompanying fast risetime with low noise. Excellent transient response, with less than 2% pk-pk waveform aberrations, ensures that waveform measurements are accurate and repeatable.

A complete set of adaptors and accessories is available, including attenuator tips with 1 megohm/2.5 pF input impedance and x10 or x100 attenuation. A 50-ohm feedthrough tee with low reflection coefficient adapts the 941 for TDR systems or waveform monitoring in a 50-ohm line with a minimum of disturbance to the transmitted signal.

1-5 SPECIFICATIONS TYPE 941 RSU

a. Risetime. Less than 350 ps.

b. Equivalent Bandwidth. dc to 1 GHz, –3 dB.

c. Input Characteristics. 1 megohm in parallel with 2.5 pF using x10 or x100 attenuator tips; 100 kilohms in parallel with 4.5 pF using x1 tip.

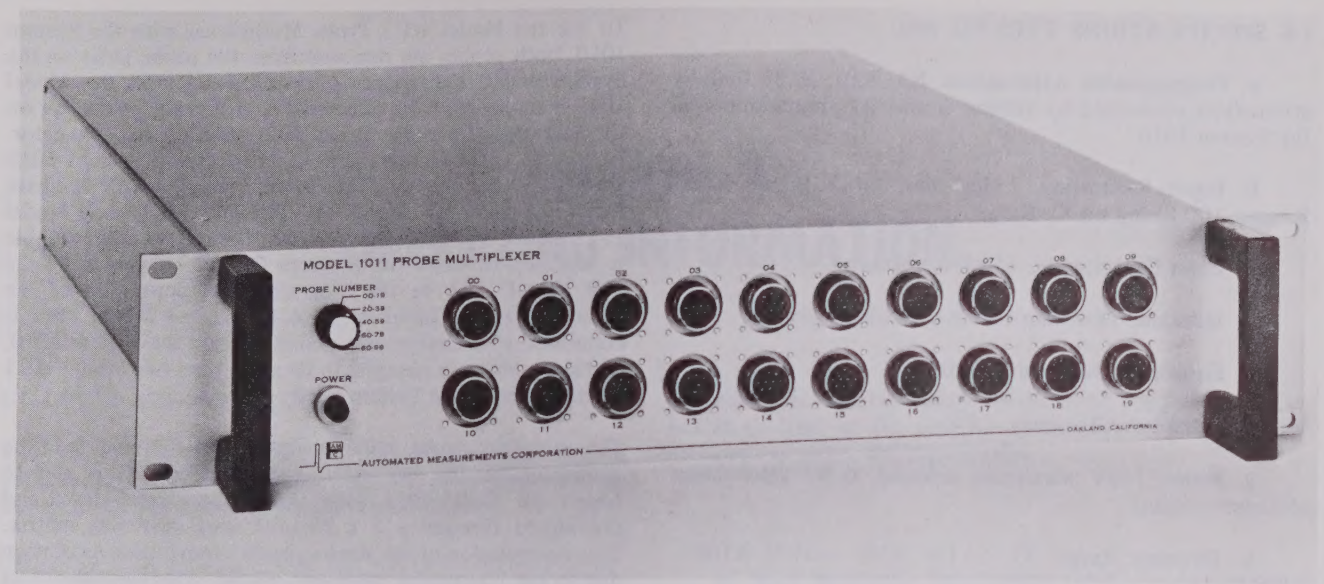

Figure 1-2 Model 1011 Multiplexer

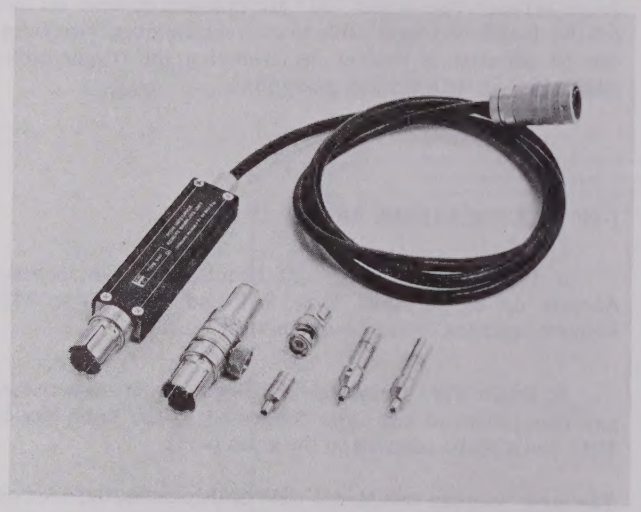

Figure 1-3 Type 941 RSU

Figure 1-4 Type 942 RSU

d. **Transient Response.** Less than 2% pk-pk aberrations.

e. **Overload Capability.** ±5 V.

f. **Accuracy.** ±1%.

g. **Dynamic Range.** ±1 V peak signal can be displayed on AMC System 1010 at 2 mV/div sensitivity.

h. **Noise.** 1 mV pk-pk maximum using 50-ohm feedthrough or termination.

i. **Coincidence.** ±50 ps maximum error between two 941 probes on the AMC 1010.

j. **Probe cable length.** 10 feet. (nominal).

1-6 OPTIONAL ACCESSORIES FOR TYPE 941 RSU

a. **X1 Tip Adaptor.** (693-41521).

b. **X10 Attenuator.** (693-41522).

c. **X100 Attenuator.** (693-41523).

d. **GR 50-ohm Adaptor.** (693-41520).

e. **50 Ohm Feed-through Adaptor.** (693-41519).

f. **BNC Adaptor.** (694-00010).

g. **Attenuator Adaptor Ring.** (407-41798).

1-7 INTRODUCTION TYPE 942 RSU

The AMC Type 942 Remote Sampling Unit provides expanded measurement capability for the AMC System 1010 Waveform Analyzer. Incorporating built-in, programmable X1, X10, and X100 attenuation, the Type 942 expands the maximum ±1 V dynamic range of the System 1010 to ±10 V or ±100 V, controlled automatically by the System 1010's sensitivity programming. A chopper is also included in the Type 942 to allow voltage measurements referenced to true ground level.

(B)

1-8 SPECIFICATIONS TYPE 942 RSU

a. Programmable Attenuators. X1, X10, X100 built-in attenuators controlled by vertical sensitivity programming of the System 1010.

b. Input Resistance. 1 Meg ohm on X10 and X100 Ranges; 100 Kohm on X1 Range.

c. Input Capacitance. 15 pF maximum.

d. Risetime. Less than 1 ns in a 50 ohm system.

e. Equivalent Bandwidth. 350 MHz.

f. Attenuator Accuracy. ±1%.

g. Noise. 1 mV maximum referred to X1 attenuation (50 ohm system).

h. Dynamic Range. X1 – ±1 V. X10 – ±10 V. X100 – ±100 V.

i. Maximum Input Signal. X1–±5V. X10 and X100 – ±100V.

j. Probe Cable Length. 10 Feet.

k. Signal Input Connector. Type BNC female standard (Phelps Dodge 700166 optional).

l. Built-In Chopper. Automatically references probe tip to signal Ground when programmed.

1-9 INTRODUCTION MODEL 1011 MULTIPLEXER

The Automated Measurements Corporation Model 1011 Probe Multiplexer is designed to expand the two-channel capabilities of the AMC System 1010 Waveform Analyzer to 20 channels or more. Any two of up to 20 remote sampling probes connected to one Model 1011 are multiplexed into the two channels of the System 1010 with the full measurement capabilities of the System 1010 being retained. Up to five multiplexers can be tied together by cascading the control cable connecting to the System 1010 and providing a trigger cable from the System 1010 to each Model 1011 individually. In this manner the System 1010 can control up to 100 remote sampling probes, displaying and making digital measurements between any two of the 100 channels.

The System 1010 is programmed and operates in the same manner with or without the use of multiplexers. Functional controls on the Model 1011 are POWER On-Off switch and a PROBE NUMBER switch. The PROBE NUMBER switch on each Model 1011 used in a system is set to select which block of 20 probes (i.e., 00-19, 20-39, etc) is connected to it. When programming the A and B probes of the System 1010, the appropriate probe number (00 through 99) is inserted in the Probe program words, and the probe number is automatically decoded by the appropriate Model 1011 Multiplexer. Since the Model 1011 is supervised by the System 1010, it can be located in a test fixture remote from the system (up to 20 feet) to facilitate fixture design. When more than one test station time-shares a control system, a multiplexer can be located in each test station.

To use the Model 1011 Probe Multiplexer with the System 1010, both probes are removed from the probe jacks on the System 1010. The trigger cable provided with the Model 1011 is connected from either the A or B probe connector on the System 1010 to the Model 1011 trigger input connector. A control cable is furnished to connect the System 1010 Multiplexer connector (J106 on rear panel) to the Program Input connector on the Model 1011. When a second Model 1011 is used with the same system, the second control cable is attached between the Program Output connector of the first Model 1011 to the Program Input connector of the second. A trigger input cable to the second Model 1011 is connected to the other probe connector on the System 1010. A trigger splitter is required to tie more than two Model 1011 Multiplexers to one System 1010.

The sampling strobe pulse available at the A and B Probe connectors on the rear panel of the System 1010 is used to trigger the Model 1011. Here the strobe is regenerated and distributed through a 2 x 20 solid state switching matrix. This regeneration of the strobe avoids bandwidth degradation due to the intervening cable and assures close coincidence of all probes connected one Model 1011 (±50 ps). Coincidence errors between two Model 1011 Multiplexers depends on the relative length of trigger cable to each multiplexer. This error can be adjusted, if desired, by trimming the trigger cable length (RG-58 with BNC on one end).

1-10 SPECIFICATIONS MODEL 1011

a. Probe Connections. 20 Front Panel Connectors. Accepts up to 20 AMC Type 941 and AMC Type 942 Remote Sampling Probes in any mixture.

b. Probe Time Coincidence. ±50 ps max error between any two probes of one type connected to the same Model 1011 (each probe adjusted to the given port).

The error between two Model 1011 Multiplexers, depends on trigger cable lengths (adjustable).

c. Program Inputs. TTL Logic Levels furnished by System 1010 Multiplexer connector.

d. Size. 3½" x 19" Panel, 20" Deep (8.9 cm x 48.3 cm x 50.8 cm). Rack mount only.

e. Weight. 25 lbs. (11.4 kg).

f. Power Requirements. 100/115 V ±10%, 50-60 Hz, 3/4 Amp or 230 V ±10%, 50-60 Hz, ½ Amp.

(1) Control Cable, 5 feet Length (1.5 m); DCM-37P Connector with Slide-Lock at each end.

(2) Trigger Cable, 5 feet Length, (1.5 m) RG-58; Probe connector at one end, BNC Female at other end.

1-11 ADDITIONAL TYPES OF RSU

Customers who desire different types of remote sampling units in addition or instead of the 941 and 942 may contact E-H for information.

SECTION 2
OPERATING INFORMATION

2-1 GENERAL INFORMATION

This section of the instruction manual gives installation procedures, describes operating controls, gives programming information, and discusses typical measurements.

Names of front-panel controls are shown in capital letters, e.g., INTENSITY; the controlled parameter (as trace "intensity") is shown in lower case.

2-2 INSTALLATION

a. General. Install the System 1010 in a location convenient to the test setup. Be sure that adequate room is left at the rear of the unit for connection of programming lines, power cable, and input cables.

b. Rack Mounting. The System 1010 is designed to be rack-mounted in a standard cabinet using the slides supplied with the instrument. Refer to Figure 2-1 for mounting dimensions. If the instrument is mounted in a rack with other equipment, be sure that warm air from the other units is not drawn into the System 1010 air intake.

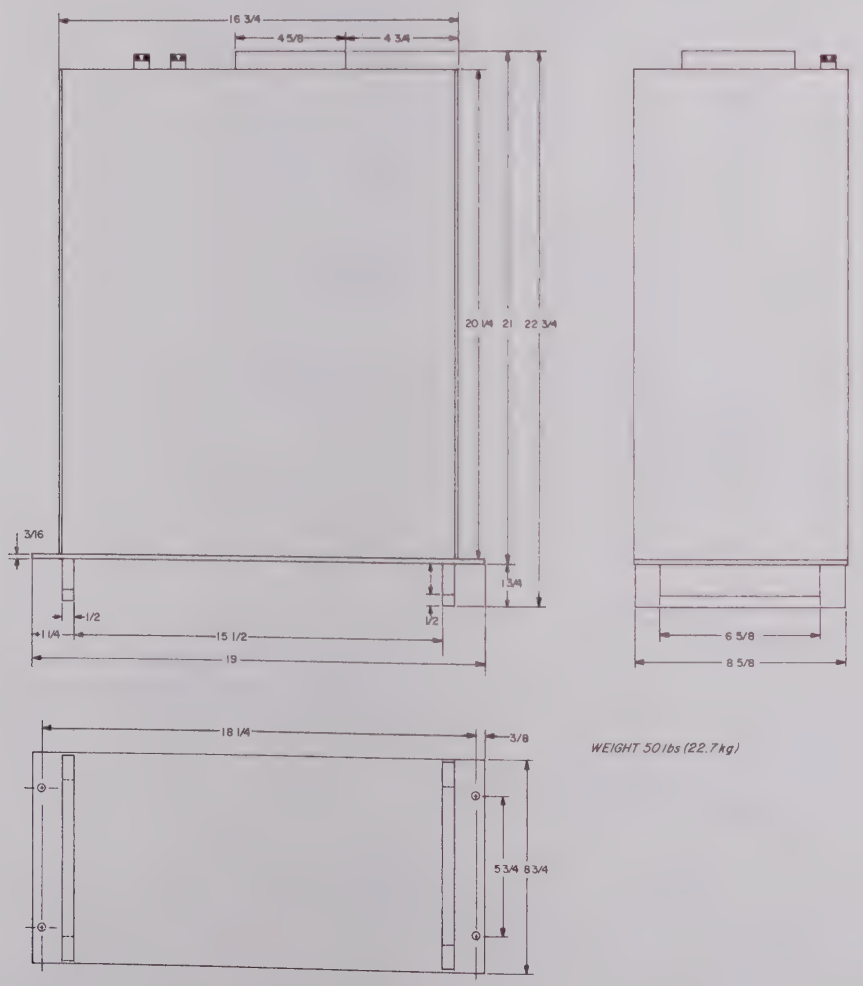

Figure 2-1 System 1010 Outline and Mounting Dimensions

c. Power Requirements. The System 1010 is factory-wired for operation from 100, 115, or 230 V, 50-60 Hz, two-wire, single-phase primary power. Check the decal on the rear panel of the instrument to determine which voltage the unit is wired to accept. Be sure that the power source is the correct voltage and frequency before connecting the System 1010.

To protect the operator from electrical shock, the instrument is supplied with a 3-conductor power cord which grounds the instrument chassis when connected to an appropriate receptacle. The offset round pin on the male power cord connector is the ground pin. To make use of this safety feature when operating the instrument from a two-contact outlet, use an adaptor and connect the adaptor pigtail to a suitable earth ground point.

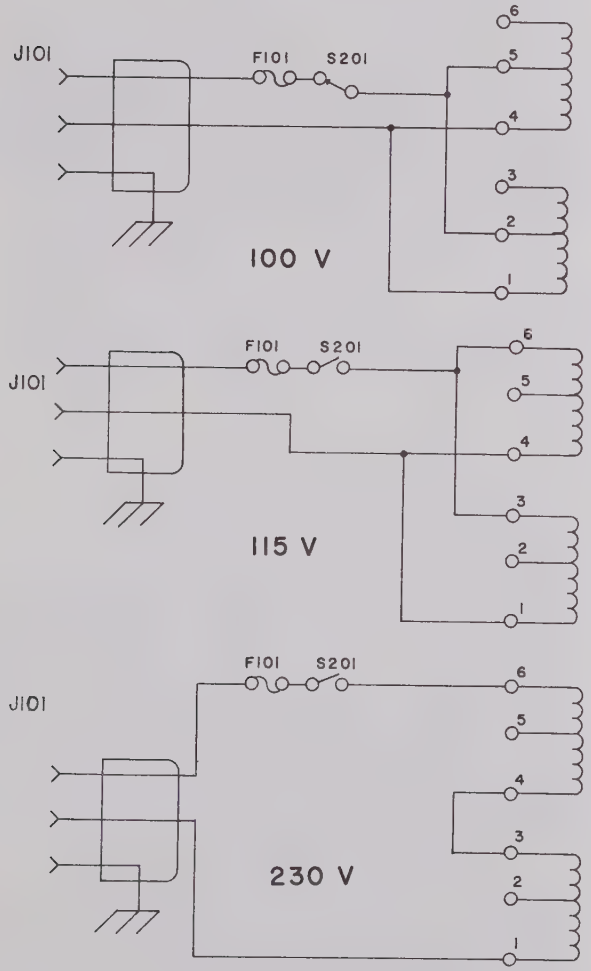

Figure 2-2 System 1010 Line Voltage Conversion

d. Conversion to 100 V or 230 V Operation. The standard System 1010 is wired to operate from 115 V primary power sources. The instrument may be converted for use with either 230-volt or 100-volt power sources by changing the power transformer primary wiring. Figure 2-2 shows the changes required.

2-3 FRONT PANEL CONTROLS AND INDICATORS

a. Display Controls (Refer to Figure 1-1)

(1) SCALE ILLUM/POWER OFF adjusts illumination level of CRT graticule, and when rotated fully counterclockwise, turns off primary power to instrument.

(2) CONTRAST controls brightness of intensified zones on CRT.

(3) INTENSITY adjusts brightness of CRT trace, both intensified and non-intensified portions.

(4) FOCUS adjusts focus of CRT for sharpest trace.

(5) ASTIG corrects CRT astigmatism for best-defined trace.

(6) BEAM FINDER brings an off-screen trace into the CRT viewing area when pushbutton is held in. (Unit must be triggered.)

(7) POSITION Controls.

HORIZONTAL moves trace horizontally.

SIGNAL A provides approximately ±100 mV offset with respect to the offset programmed at the probe input (excluding attenuation). Vertical trace movement range depends on A channel sensitivity programming.

SIGNAL B performs the same function as SIGNAL A, but affects B channel trace. When either SIGNAL A or SIGNAL B controls are rotated fully counterclockwise into the detented PRESET position, the offset is automatically set at zero with respect to the programmed offset. If either control is rotated out of the detent, a front-panel NOT PRESET light comes on.

b. Trigger Controls

(1) POLARITY switch selects AC or DC coupling of the trigger signal, and positive or negative polarity.

(2) STAB. adjusts trigger point for stable triggering at all frequencies. When set to detented PRESET position, provides optimum stability for signals up to 20 MHz. NOT PRESET lamp lights when STAB. control is rotated out of the detented PRESET position.

(3) DC LEVEL control selects trigger point when POLARITY switch is in either of the DC positions. When set to detented PRESET position, provides optimum trigger level for signals exceeding approximately 200 mV. NOT PRESET lamp lights when DC LEVEL control is rotated out of detented PRESET position.

c. Measurement Mode and Programming Controls

(1) MEAS. MODE switch selects CONTINUOUS for continuous measurement cycle or REMOTE (GO) for initiation of measurement cycle by external start command, either a "GO" on the ASCII program lines or an external start pulse.

(2) SINGLE MEAS pushbutton initiates a single measurement cycle each time the pushbutton is pushed.

(3) NEW PROGRAM pushbuttons reset internal program storage registers to accept a complete new program. The two pushbuttons are interlocked so that both must be pressed simultaneously to achieve program reset.

d. CRT Display consists of a waveform portion and a digital readout/program portion.

(1) Left-hand portion of display consists of eight lines of eight alpha-numeric characters. The top line is the digital measurement readout, consisting of polarity indication, four decimal digits with decimal point, and measurement units (ns, mV, etc.). The remaining seven lines show the program stored in the System 1010. Refer to paragraph 2-5 for a complete description of the program format.

(2) The right-hand portion of the CRT display is a dual-trace presentation of the signals that appear in the programmed time "window". Time or voltage amplitude measurements can be made on waveforms or portions of waveforms appearing in the "window"; no measurements can be made unless the programming is such that the waveform appears. The CRT display is intended primarily for initial setup. In most systems applications, the waveforms on the screen change too rapidly for the eye to follow.

2-4 PROGRAMMING AND INTERFACE CONSIDERATIONS

The System 1010 is intended to be programmed from a wide variety of programming sources, including keyboards, tape readers, and digital computers. Any data source providing alpha-numeric ASCII characters having TTL-compatible, ground true logic levels plus a clock or strobe line, is capable of programming the System 1010. An optional keyboard, part number 146-41942, is available for manual programming of the System 1010.

For systems with parallel ASCII programming buses, a jumper pattern on the Display Logic Board A6 can be arranged to require addressing of the System 1010 before it can be programmed. Jumper JR7, when open, causes the System 1010 to ignore data inputs until the character sequence WAn is entered. This sequence opens the System 1010 program input if n is any of the digits 1 through 6 for which one of the jumpers JR1 through JR6 have been installed.

After programming, a period (.) releases the System from the ASCII bus.

The output bus remains active whether the input address has been received or not.

a. General Interface Requirements. All interface connections are on the rear panel (See Figure 2-3). A typical System 1010 set-up is shown in Figure 2-4. Two rear-panel connectors are provided for connection of programming, data recording, and control units. Tables 2-1 and 2-2 list pin connections for these connectors. Connectors J102/J103 are loopthrough programming connectors that allow the System 1010 program lines to be connected to other units which are programmed by the same party line. If the System 1010 program lines are not connected to other units, J103 must have a termination connector, part number 693-41884, installed. This connector is supplied as an accessory with the System 1010. The programming source must be capable of sinking 12 ma (for new 1010's) or 40 ma (for old 1010's) in the low ("1") state.

Connector J109 is a data output and control input connector. Outputs are provided for external recording of both measurement and program information. Inputs are provided for external commands to initiate measurement cycles, and to command program readout. Outputs are also provided to indicate measurement in progress, measurement data ready, and end of program display. All outputs are capable of driving up to five standard TTL unit loads. The following is a discussion of the various inputs and outputs provided.

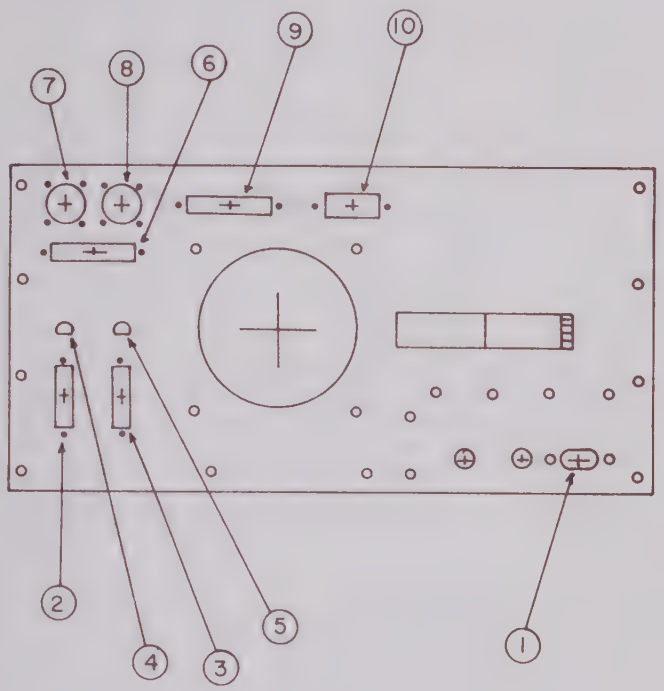

1. J101 AC IN
2. J102 PROGRAM LINES (IN)
3. J103 PROGRAM LINES (OUT)
4. J104 TRIG. IN
5. J105 M.I.P. (MEASUREMENT IN PROGRESS)
6. J106 MULTIPLEXER
7. J107 A PROBE
8. J108 B PROBE
9. J109 COMPUTER CONTROL
10. J110 (OPTIONAL BCD OUTPUT)

Figure 2-3 System 1010 Rear Panel Connections

b. Program Inputs
(Refer to Figure 2-5 for signal timing.)

(1) ASCII input pins 1, 3, 5, 7, 9, 11, 14 and 16 and associated ground pins 2, 4, 6, 8, 10, 12, 15 and 17 on J102. These are inputs for externally-generated ASCII bits 1-8. Logic levels are logic "1", 0 to +0.5 V and logic "0" +2 to +5 V. Program inputs are serial by character, with each character entered by a strobe or clock pulse.

(2) Clock input pins 18 or 20 on J102 and ground pins 19 and 21. Two clock inputs are provided, one for a relatively slow data source such as a keyboard, and one for a high-speed data source such as a digital computer. When a clock input is connected to pin 18, input character rates up to 1 MHz can be accepted. The character must be stable for 100 ns before the leading (falling) edge of the negative-going

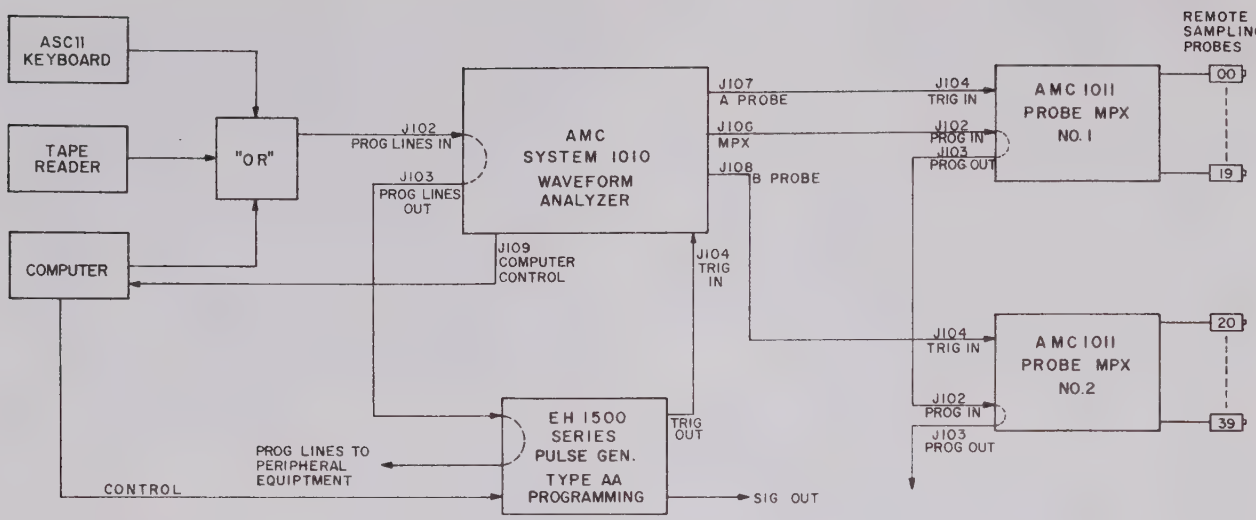

Figure 2-4 Typical AMC System 1010 Connection For Up To 40 Sampling Probes

clock pulse, and 100 ns after the trailing (rising) edge. The clock must be at least 300ns wide. A clock input connected to pin 20 gives program editing capability. It must have a pulse width greater than 13 ms, and approximately 70 Hz is the maximum character rate. Clocking for program editing must appear on pin 20, and clocking for the fast program mode (in response to a Computer Flag) must appear on pin 18.

(3) Computer Flag input. This is a logic input used to request a program change. A negative-going input with pulse width greater than 250 ns to J102, pin 24, flags the 1010 and prepares the program logic for a program change. A ready flag output is available at J102, pin 13, to indicate that the System 1010 is ready to accept the new program.

(4) Ready Flag output. This logic output on J102, pin 13, is generated in response to a Computer Flag input and indicates that the System 1010 is ready to accept new program inputs at the ASCII lines on J102. The Ready Flag is a negative-going pulse 300 to 400 ns wide. A complete 56 character program must be entered to exit from this fast program mode, with the clock appearing on pin 18.

NOTE

When punched tape is used to program the System 1010, errors in the tape cannot be corrected by use of the "rub-out" character. If an error is made in preparing a tape, the tape should be retyped correctly. Alternatively, if all field codes have been entered correctly, errors can be corrected by entering the tape and then editing through the keyboard. After a program is entered, the edit mode is entered on any line by simply typing the two-character field code for that line, followed by the correct program characters. Exit from the edit mode is automatic at the end of the 8-character line.

(5) +5 V power supply output on pin 23 of J102 is available for use with the optional keyboard, or can be used for external programming circuits.

c. **Data and Control.** Rear-panel connector J109 provides data output lines and control lines. The following describes the function of each input and output.

(1) Data outputs, pins 4 through 9 of J109. These lines provide six parallel ASCII bits with negative-true logic signals (logic "1" level +0.4 V max.; logic "0" level +2.4 V min., 3.5 V nominal). Normally the data outputs cycle through the eight characters of the digital readout in serial-by-character fashion, starting at the end of a measurement and repeating every 12.3 ms. Data Clock and Data Gate described below allow clocking of the data into peripheral equipment. On request these lines will output the fifty-six character program displayed on the CRT. An optional BCD positive-true output is available. (See Table 2-3).

(2) Data Clock output, pin 19 of J109. The data clock is always present. The clock waveform is a TTL-level square wave with a period of 192 μs. The negative-going edge is coincident with the appearance of a new character on the ASCII output lines, and the positive-going edge (appearing in the middle of the character) should be used to clock the data out.

(3) Data Gate output. This is a TTL-level logic signal at pin 28 of J109 that goes low during the time when digital measurement or program characters are being presented on the Data Output lines, and can be used to gate the Data Clock. Normally this signal goes low after the end of a measurement, coincident with the appearance of the first character of the DRO. When Data Gate goes high, the sequence of eight characters is finished. In measurement data mode, Data Gate recurs every 12.3 ms. In response to a Program Command, the width of the next Data Gate will be sixty-four characters, coinciding with the appearance of the displayed program followed by the DRO data on the ASCII Data Output lines.

(4) Program Command input. When a negative-going TTL-level pulse of 250 ns to 25 μs width is present at pin 30 of J109, the next Data Gate will be 64 characters wide and the System 1010 will output the 56 ASCII characters comprising the complete program as displayed on the CRT, followed by the Data Read Out. The Data Clock is available at pin 19 of J109, just as in measurement data output, to

1010 TIMING DIAGRAMS

SEQUENCE OF PROGRAMMING SIGNALS

1. Conditioning the System 1010 to receive a new program (Fig. 2-5a)
   a. Computer Flag in
   b. Ready Flag out
2. Loading a new program (Fig. 2-5b,c)
   a. 56 ASCII characters in
   b. Computer Clock in
3. Edit mode programming (Fig. 2-5d)
   a. 8 ASCII characters in
   b. Keyboard Clock in
4. Starting a measurement (Fig. 2-5e,f)
   a. GO or Remote Single Measurement in
   b. MIP (Measurement In Progress) out
5. Reading the results (Fig. 2-5e,f)
   a. $\overline{\text{MIP}}$ out (not necessary to monitor with NEW Display Logic Board)
   b. Data Gate out
   c. Data Clock out
   d. DRO (digital read-out) out
6. Reading the present program (Fig. 2-5g)
   a. Program Output Command in
   b. Data Gate out
   c. Data Clock out
   d. Program (56 ASCII characters) and DRO out

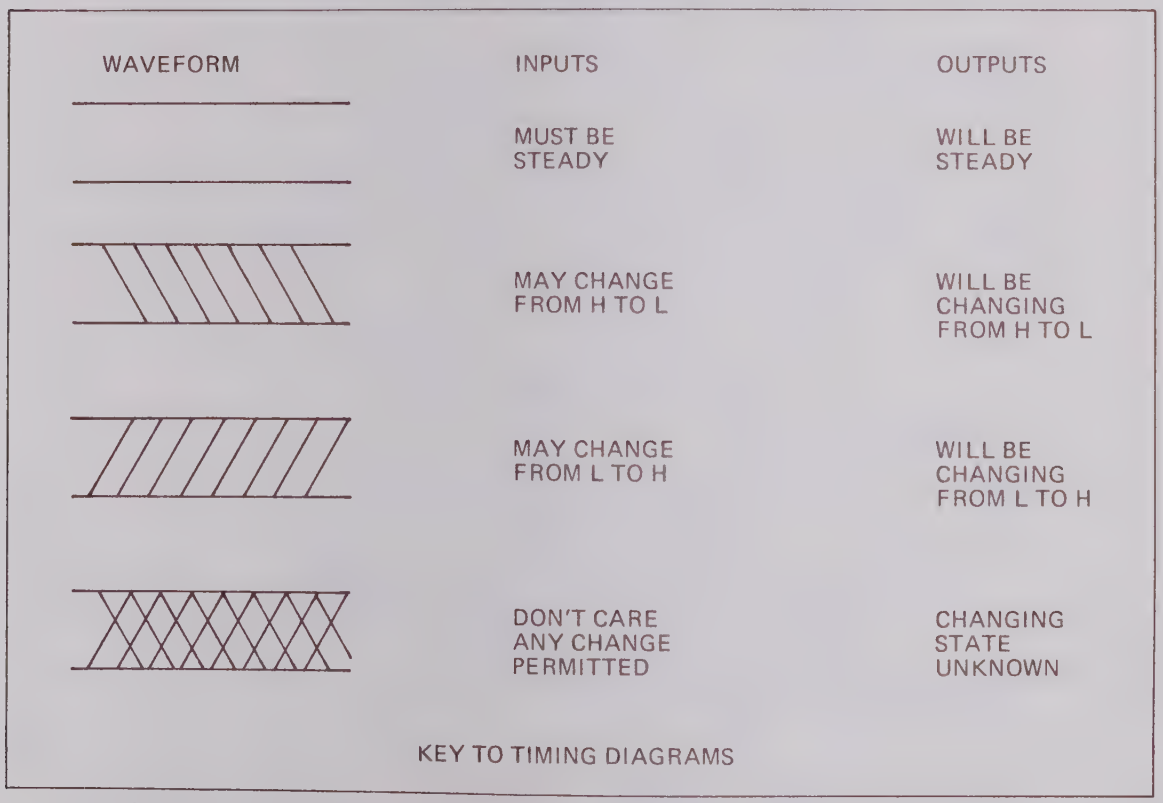

KEY TO TIMING DIAGRAMS

NOTES

1. "OLD" refers to units with modified Display Logic Board.
2. "NEW" refers to units with a redesigned Display Logic Board.
3. The Computer Clock must be High (false) to perform measurements.
4. Since Data Gate and Measurement In Progress are ascynchronous, the first valid Data Gate after a measurement is denoted by the first Data Gate negative-going edge (not Level) after the Trailing Edge of MIP.
5. MIP always disables Data Gate. A measurement start will interrupt a Data Gate if present. The full 8 characters (Data) or 64 characters (Program plus Data) will continue being transmitted but the Data Gate will not be present. In the absence of Data Gate, the data may not be valid, but the Program still will be valid.
6. Data Out and Data Clock are continuously available. Data Gate should be used to gate information into any instrument reading the data.

(B)

Figure 2-5 Timing Diagrams

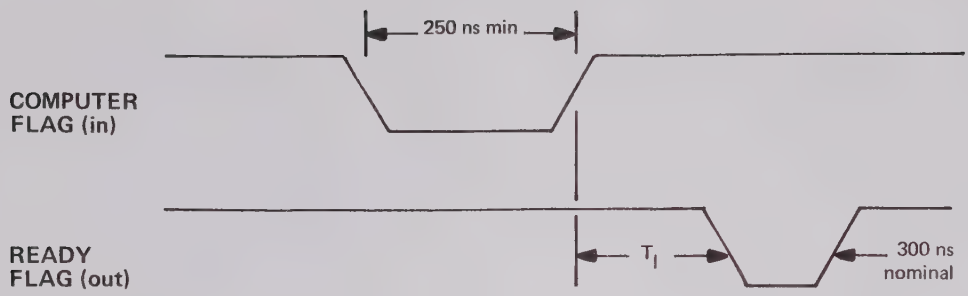

a. System Conditioning Signals

T_I = 0 to 12.3 ms (OLD Units)

T_I = 300 ns (max) (NEW Units)

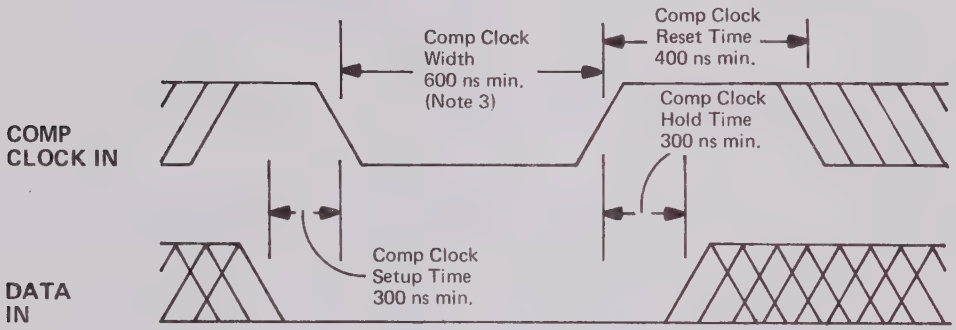

b. Computer Clock Input, OLD Units

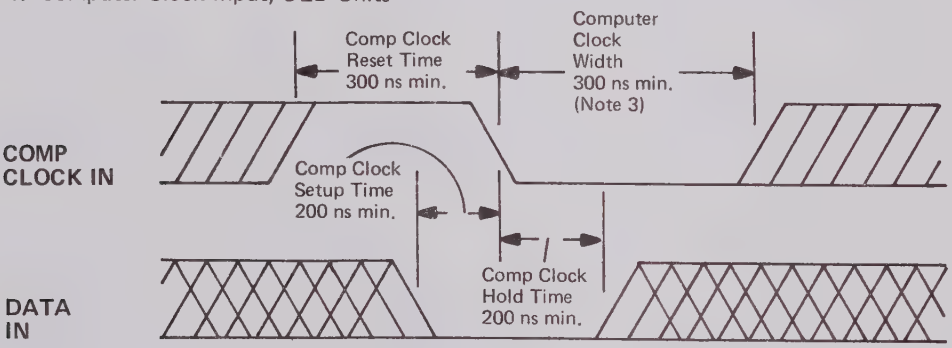

c. Computer Clock Input, NEW Units

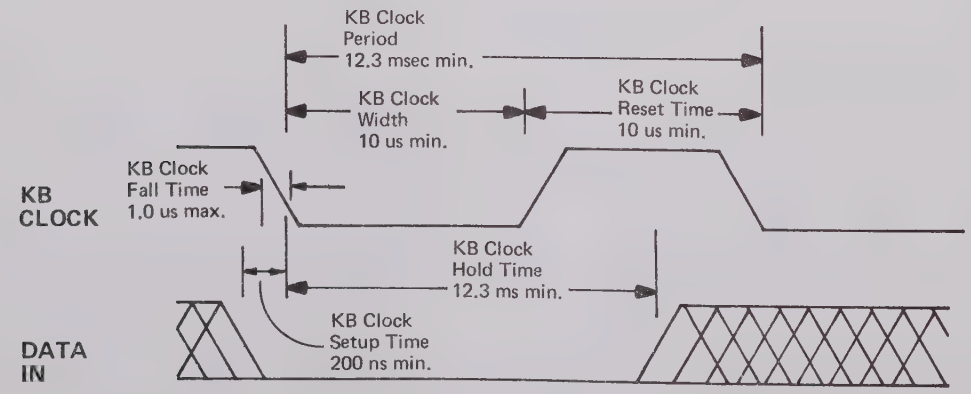

d. Keyboard Clock Input

Figure 2-5 Timing Diagrams (continued)

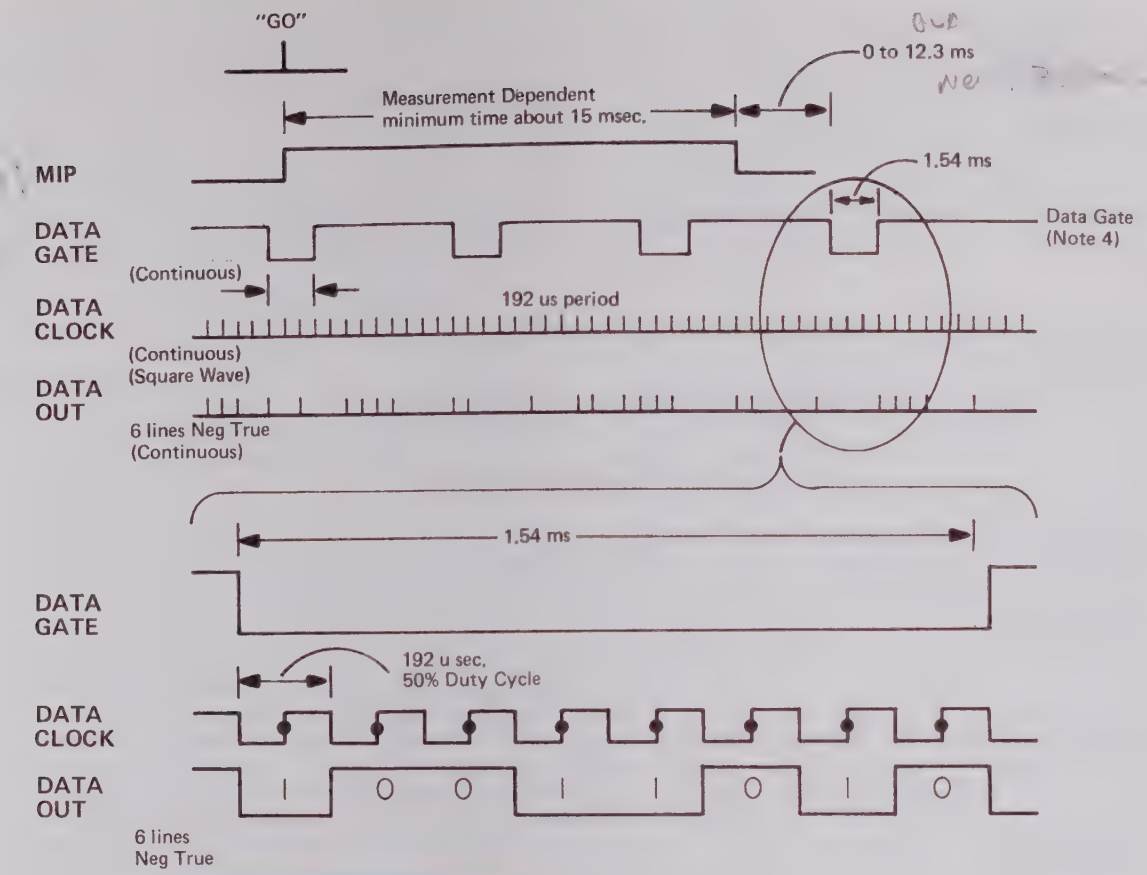

e. Data Output, OLD Units.

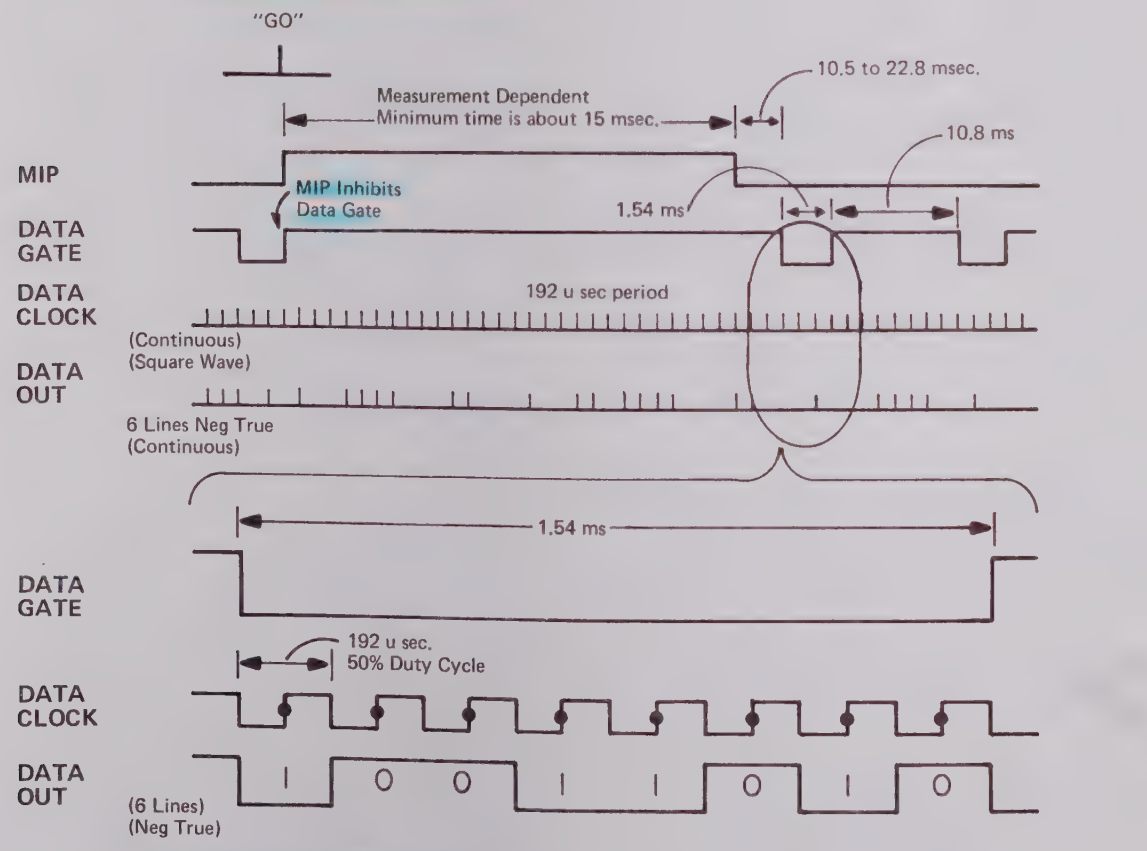

f. Data Output, NEW Units

Figure 2-5 Timing Diagrams (continued)

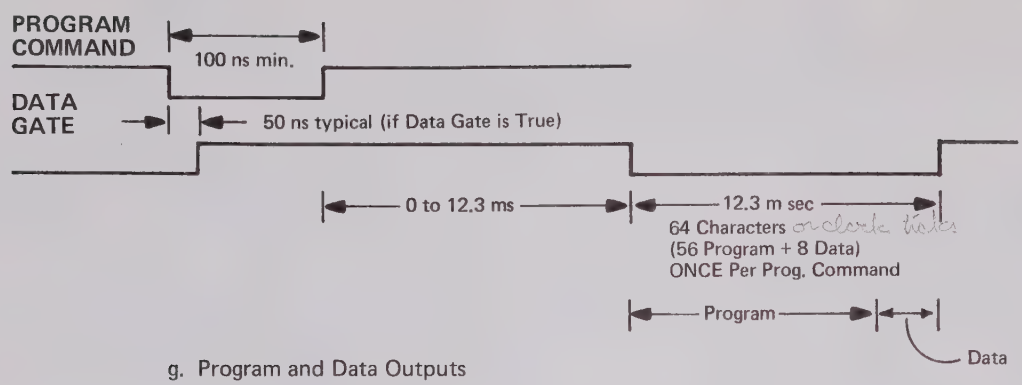

g. Program and Data Outputs

Figure 2-5 Timing Diagrams (continued)

clock the characters into external equipment. The program output is presented once on command, after which the System 1010 reverts to cycling through measurement data output once every 12.3 ms. There will be a 0 to 12.3 ms delay between the Program Command and the appearance of the Data Gate with the first character of the program.

(5) End of Program output, pin 11 of J109. This is a TTL-level logic signal that indicates when a display of the program on the CRT is complete. The negative-going transition, occurring with a 12.3 ms period, indicates the end of the program display. In the CONTINUOUS MEASUREMENT mode this signal triggers a new measurement cycle. In the REMOTE/GO mode the negative-going edge also indicates the start of a DRO cycle, except that the actual display may be pre-empted by a measurement command.

(6) Measurement in Progress output on J109 pin 15. This is a TTL-level logic signal that remains high (nominally 3.5 V) while the System 1010 is making a measurement. At the end of the measurement period the "MIP" signal goes low (+0.4 V). This signal can be used as a gate for other units in a system, turning them off during the measurement cycle, or to indicate the first appearance of new data output after a measurement.

(7) Remote Single Measurement input. This connection on pin 22 of J109 allows an external zero-true logic signal or a contact closure to ground to trigger a single measurement cycle.

d. Trigger Input Connector J104. The Trigger Input Connector is a BNC jack with a nominal input impedance of 50 ohms. The maximum safe input signal level is ±5 Volts.

e. M.I.P. Output Connector J105. The Measurement in Progress signal at this connector is a TTL level logic signal which is high (+2.4 V minimum) while the System 1010 is making a measurement. This signal is also available on pin 15 of J109, and can be used for priority gating in peripheral equipment.

f. Multiplexer. J106 is a 37-pin connector for connecting AMC Model 1011 Probe Multiplexers to the System 1010. Remote probe number and control signals, chopper signals and sampled signals are routed through this connector by way of the control cable furnished with the Model 1011. Table 2-4 lists the signal on each pin. Two corresponding connectors on the Model 1011 are wired in loopthrough fashion so that up to five probe multiplexers may be connected to a System 1010.

g. A Probe (J107) and B Probe (J108). Two remote sampling units, either type 941 or type 942, may be connected to the System 1010 at these ports for two-channel operation. For proper operation each remote sampler should be adjusted for the port on which it is to be used. When using Model 1011 Probe Multiplexers for multiple-channel operation, both remote sampling probes must be removed from these ports. A trigger cable for each multiplexer (furnished with the Model 1011) is then connected to either of these ports, where the sampling strobe is borrowed to trigger the strobe regenerating circuit in the multiplexer. (If more than two probe multiplexers are to be used, an optional trigger splitter will be required).

h. Program Format. The program format of the System 1010 consists of seven program words, each containing eight alpha-numeric characters. Each word has a two-letter prefix or field code that serves as a unique "address" for the parameters programmed by that word. The six remaining characters define the parameters within the program word. The seven programming field codes and model program words are shown in Table 2-5, where "X" denotes an alpha character and "#" denotes a numeric character. While the program words can be mixed in any sequence, the order shown in Table 2-5 is recommended to avoid confusion. Tables 2-6 through 2-9 detail the programmed parameters and the valid characters for each word in turn. The following paragraphs more completely define individual parameters in each word.

(1) RA (Time Range). The first program word, field code RA, programs time range and other parameters relating to the sweep. The first two digits following the field code (3rd and 4th characters) define the time per division as shown in Table 2-6. Each of nine ranges has a 0.2–.5–1 multiplier sequence (with decimals omitted), except that there is no "2" multiplier on range 3. A convenient mnemonic rule for remembering time ranges in powers of ten is to consider the .2, .5 or 1 multiplier as the modulus and the negative of the range as the exponent. For example, RA57##X# represents .5x10 (exp –7) seconds/division. The 4th and 5th digits in this word program sampling point (observation window) delay as a percentage of full-scale time for that range with a "1" multiplier. On range 7, for example, programming the delay from 00 through 99 represents a delay range of 0 to 990 ns regardless of which multiplier is

programmed. There is no delay in real-time sampling, ranges 1 through 3, although it is necessary to program some number such as 00 to fill out the program word. Valid characters for the seventh digit are T, A or B, calling for a measurement of Time, A channel Volts or B channel Volts respectively. The start and stop points for a time measurement are specified when programming the start and stop comparators, Table 2-8, in conjunction with A and B memories, Table 2-9. Voltage measurements are made only on A or B waveforms from 0% to 100% of the waveform as defined by the memory programming. A basic measurement cycle, programmed by a "0" in the last digit of the range word, consists of a full sweep to charge the waveform memories followed by a second full sweep during which the digital measurement is made. When a digital measurement is completed near the left-hand edge of the screen, as shown by the intensified zone on the waveform, it might be desirable to terminate the measurement sweep at that point to reduce the time required for a measurement cycle. This can be done by programming a "1" as the eighth character. The average-of-10 sweep mode consists of a memory sweep followed by 10 measurement sweeps, the digital readout being the average of 10 measurements. Again, the programming allows for full measurement sweeps (2) or short measurement sweeps (3). In all of these sweep modes, 0-3, digital averaging in the comparators minimizes the possibility of abbreviated time measurements due to noise or jitter on the rising or falling edge. These are the normal sweep modes, and result in an apparent three-dot delay in the intensified (measurement) zone on the waveform. However, when making time measurements on extremely narrow pulses, where a pulse width consists of only a few samples, it might be desirable to bypass digital averaging by programming the digits 4 through 7 in the last character.

(2) AP and BP. The A Probe and B Probe program words, shown in Table 2-7 , are similar but independent. When using probe multiplexers the appropriate probe numbers (00 through 99) for A channel and B channel are programmed following the AP and BP field codes. If the System 1010 is used alone as a two-channel unit, some two digit number must be programmed to fill out the program word, even though the number is not functional (field codes must not be used here). By using the 1011 Probe Multiplexer, any probe can be programmed as channel A and any other as channel B. In this case, if the same probe is programmed in both A and B channels, an A-channel preemption circuit in the 1011 disconnects B channel. It is recommended that two probes always be programmed to properly terminate the signals in the probe connectors. Vertical sensitivity for A and B probes is independently programmed in a 2–5–10 sequence from 2 to 100 mV/div. using x1 probes, or up to 10 V/div. using attenuators (screw on for the 941, programmed in the 942). Offset programming is ±0 to ±0.9 volt in 0.1 volt increments referred to the x1 attenuator. When other attenuators are used, offset referred to the attenuator input is multiplied by the attenuation factor. That is, when using a x10 attenuator, offset is 0 to ±9 volts in 1 volt increments, etc. The deflection of the trace on the CRT depends on vertical sensitivity programming.

(3) ST and SP Comparators. The Start and Stop Comparators are programmed to define time measurement end-points. A time measurement can start or stop on A or B, at the first or second transition, or on either the positive slope or the negative slope. This is shown clearly in Table 2-8. The 3rd and 4th digits in these program words define the start and stop level, 00 through 99, while the 5th digit specifies whether this level is a percentage of the waveform (%) or a voltage offset from the 0% level (+ or –). Percentage level start and stop points refer to the specified percentage of the waveform voltage as defined by the 0% and 100% memories for a given channel. Offset level start and stop points 00 to 99 signify 0.0 to 9.9 screen divisions above (+) or below (–) the 0% level of the waveform as defined by 0% memory programming. The offset level in volts depends on vertical sensitivity programming for the start or stop channel. The ST and SP program words are functional only in time measurements.

(4) AM and BM (Waveform Memories). All measurements made by the System 1010 depend on A Memory (AM) and B Memory (BM) programming to define the 0% and the 100% voltage levels of the waveform on A and B channels respectively. Each channel incorporates a negative peak detector for the 0% waveform memory and a positive peak detector for the 100% waveform memory. Referring to Table 2-9, the first two digits, 01-99, following the field code specify the percentage of the full-scale sweep where the 0% memory gate operates. The next character specifies whether the 0% memory operates in a gated (G), peak (P) or reference (R, signifying "chop to reference level") mode. Similarly the next two digits, 01-99, specify the percentage of the full-scale sweep where the 100% memory gate operates, and the final character programs this memory for gated (G) or peak (P) mode operation. Intensified dots mark the location of 0% and 100% memory gate programming (two dots on each trace). In the gated mode for any memory, the sweep stops at the programmed time and 10 samples are taken at the same point on the waveform to charge the given memory to waveform voltage at that time. The sweep then continues without a perceptable pause. In the peak-peak mode the 0% and 100% memories seek out the most negative and the most positive points, respectively, on the waveform in the time window between the 0% and 100% memory dots. For example, AM10P90P defines the 0% level as the most negative peak between 10% and 90% of full-scale time, while 100% is the most positive peak in that window. Combinations of gated and peak memories make it possible to make measurements such as pulse peak from baseline, overshoot, etc. The reference (chopper) mode applies to the 0% memory only, and should not be programmed unless a chopper is associated with the probe. In this mode the chopper switches the probe input to a reference voltage level, usually ground, at the start of a measurement cycle. Ten samples are taken to charge the 0% memory to this voltage level before a sweep is begun. In this mode the System 1010 measures waveform voltage with respect to ground (or some other reference) rather than from point to point on the waveform. When the 0% memory is programmed for R, the 01-99 location of the 0% memory dot is functional only in locating one boundary of the search window for the 100% memory if it is in the peak mode. The location "00" should be used only to get memory dots off-screen if they are not wanted, as in AM00R90G where the 0% memory dot is not functional. Otherwise "00" is not normally a valid location.

2-5 PROGRAMMING THE SYSTEM 1010

When the System 1010 is first turned on, the program memory is filled with zeros and the program display is filled with "@" signs with the character place marker indexed at the upper left corner. This condition is equivalent to punching the NEW PROGRAM buttons, and the unit is ready to receive a new program. While the system is operating at turn-on, the zeros do not constitute a valid program and a

complete program of 56 characters must be entered to exit from the "new program" mode. The program is entered in solid-packed form by starting each word with the appropriate two-letter field code and with no spaces between words. As previously mentioned, the program can be entered in either a slow or a fast mode, depending on the programming source. These modes are further discussed below. Regardless of program source, the use of field codes within program words should be avoided.

a. Slow Program Mode. When using a keyboard or other program source with a character rate less than about 70 Hz and which holds each character longer than 12.3 ms, the System 1010 can be programmed without preamble. After 56 characters have been entered the System 1010 automatically exits from the new program mode. That is, it no longer responds to the keyboard unless a valid field code is entered. This places the system in the edit mode, as described below.

b. Edit Mode. After initial programming, the edit mode is automatically entered at any time by simply typing the field code "address" for the word to be edited through the slow program source. That is, the System 1010 always monitors the keyboard or other slow source as described, with strobe appearing on pin 20 of J102, and requires only a field code to respond. Any valid program word already entered into the System 1010 can be edited at any time (except during the new program mode) by retyping it with the appropriate new parameters substituted for the old, or the same data typed again where no change is desired. After entry of the two-character field code, the next character to be typed is intensified as a character place marker. This character changes to the new program parameter when typed, and the intensified place marker advances to the next character. On completion of the eight-character word the place marker disappears and the system automatically exits from the edit mode. At this time any other line, or the same line again, may be edited in the same manner. Alternatively the keyboard may be used to address peripheral equipment in the system, provided that 1010 field codes are not used. One requirement for editing the 1010 is that the given program word must have been entered with a valid field code during initial programming (in the new program mode). If a mistake has been made in entering the field code during initial programming, it cannot be edited. In that case it is necessary to depress the NEW PROGRAM buttons and reprogram. Other mistakes in the initial program can be edited after 56 characters have been entered. Mistake-prone typists might try entering the new program as a field code followed by six zeros for each word to assist in initial programming, then editing each word as desired.

c. Fast Program Mode. The fast program mode accepts program data at character rates up to 1 MHz. Since the System 1010 is normally monitoring the keyboard for edit commands, an interchange of flag signals is needed to switch over to the fast program mode for programming from such sources as a computer or a high-speed tape reader. The character strobe in this mode must appear on the "Computer Clock" input, pin 18 of J102. This routine is described below, and eliminates the need to depress the NEW PROGRAM buttons on the front panel. A computer is assumed to be in control in the REMOTE/GO mode.

(1) Computer flags 1010 that it is ready to output new program.

(2) System 1010 interrupts measurement in progress or data readout, resets program display to first character, and gives Ready Flag to computer. Ready Flag is a low-going pulse 300-400 ns long beginning 150-200 ns after the trailing edge of Computer Flag.

(3) Computer dumps tightly-packed data at its own rate (with or without interruptions, but no spaces).

(4) New Program is complete after 56 characters. System 1010 gives End of Program flag to computer.

(5) System 1010 can be edited via keyboard if desired.

(6) Computer initiates measurement via "GO" command or via a single pulse into the Remote Single Meas. input, pin 22 in J109.

(7) System 1010 will report measured data during Data Gate time, which occurs every 12.3ms except during a measurement or program readout. A new measurement command may interrupt the Data Gate signal, but the first instance of Data Gate after a measurement will contain valid data.

(8) System 1010 can be flagged for a new program at any time. The flag must be held off until any desired data resulting from the previous measurement are read.

d. Data Display. Messages other than valid System 1010 programs may be displayed on the CRT, but certain pitfalls should be kept in mind. Program material entering the System 1010 splits into two paths—one to a set of recirculating shift registers for storing the 56 character data display, and another to a matrix of program memory latches controlling the system. The character generator for the data display will generate 64 ASCII characters, although some are not used in valid programs. In the new program mode, any of the available characters entered will display on the CRT, but the program memory can be addressed only by using valid field codes. Messages other than valid programs will result in programming the System 1010 with "garbage" if any of the seven two-character field codes are included. Although the System 1010 is not harmed by invalid programming, certain character combinations containing field codes can result in non-sensical programs that cause the loss of the display. The exit procedure from this condition is to manually depress the NEW PROGRAM buttons, restoring the system to the initial turn-on condition. When operating under computer control, a useful method of displaying computer diagnostics or programming for other elements of a system without dumping the previously-entered System 1010 program is as follows.

(1) System 1010 is previously programmed.

(2) Computer flags System 1010 for new program input.

(3) System 1010 indexes display and responds with Ready flag.

(4) Computer dumps 56-character message not containing two-character field codes. Shorter messages must be filled out with spaces—System 1010 waits for a total of 56 characters before displaying any message.

(5) System 1010 signals End of Program and displays message while awaiting next command.

(6) Computer may now give a "GO" command for measurement by previously-entered valid program.

(7) Cycle may be repeated as desired—for example, to adjust pulse generator delay in increments while displaying its program.

(8) Program Output Command from computer will result in System 1010 outputting displayed message, not program memory contents.

2-6 FIRST TIME TURN-ON

The following procedure can be used as a quick check for proper operation and as a means of familiarizing operators with the use of the System 1010 in digital waveform measurements. The optional keyboard will be assumed as a program data source for convenience and for its editing capability.

a. Set ASTIG., FOCUS and CONTRAST controls midrange.

b. Set INTENSITY fully counterclockwise.

c. Set POSITION and TRIGGER controls to detented PRESET position.

d. Set TRIGGER POLARITY control to AC+.

e. Set MEAS MODE to REMOTE/GO.

f. Connect two Type 941 or Type 942 Remote Sampling Units to rear-panel connectors J106 and J107. Connect the output of a signal source (preferably a pulse generator with variable pulse delay or a square wave generator with separate trigger output) to both sampling units using a tee adaptor. If possible, make the cabling to one sampling unit about 6 feet longer than the cable to the other unit to give some relative delay between signals.

g. Connect the trigger output of the signal source to the System 1010 Trigger Input jack, J104, and set the front panel TRIGGER POLARITY switch to the proper polarity for the trigger output. Set the output of the signal source for approximately 500 mV pulse amplitude, 1 μs pulse width and 300 KHz repetition rate. If the signal source has variable delay, set pulse delay to about 3 μs.

h. Rotate SCALE ILLUM. control out of the detented POWER OFF position and set for desired scale illumination. Turn on the signal source and allow a few minutes for the System 1010 to warm up.

i. Turn up the INTENSITY control for a moderately bright data display, and adjust FOCUS and ASTIG. controls for optimum sharpness.

NOTE

Unit must be triggered—turn TRIGGER STAB control clockwise if necessary to get a display.

j. Turn CONTRAST fully clockwise. Program display should be filled with the "@" character with intensified character place marker indexed in upper left corner (2nd line, after DRO). If place marker is not indexed, depress NEW PROGRAM buttons.

k. Enter the following program:

```
RA1650T0
AP0011+1
BP0111−1
ST50%A1+
SP50%A2+
AM01P99P
BM01P99P
```

NOTE

If the Model 1011 Probe Multiplexer is used, the program remains the same but A and B probe Nos. should be the appropriate probes connected to the multiplexer.

l. Set MEAS MODE switch to CONTINUOUS and observe the display. Both channels should display more than two pulse periods. Edit the offset programming to center both traces vertically on the screen. That is, reenter the AP and BP words with the desired new offset. Adjust the TRIGGER STAB control if necessary to obtain a clean display. (If a pulse generator is used at a lower frequency than that specified, it might be necessary to adjust the delay control to bring the signal into the time window shown on the CRT).

m. The digital readout (DRO) should indicate pulse period on channel A, approximately +03.33 μs. Both traces should have intensified memory dots at 01 and 99 percent of the sweep, and channel A should have an intensified measurement zone running from the first positive to the second positive transition.

n. Enter ST50%B2−, SP50%B1−. The DRO should indicate a negative period for channel B—approximately -03.33 μs—with the same absolute value as measured on A channel. The negative value indicates the stop point precedes the start point on the trace. Channel B should now show the measurement zone intensified.

o. Enter ST50%B1+, SP50%B1−. The DRO should indicate either pulse width or time between pulses, depending on which transition occurs first on the screen.

p. Enter RA1670T0 and observe that the display shifted two divisions to the left (the sampling point was delayed). The DRO will have changed if a different transition now occurs first on the screen.

q. Enter RA1650A0 and observe peak—to—peak A channel volts on the DRO.

r. Edit A Memory to place the 0% marker on the flat top of a pulse and the 100% marker on the baseline in the gated mode. For example, if the baseline exists at 30% of the sweep and a pulse top exists at 50%, enter AM50G30G. The DRO should indicate volts on the A waveform between the levels of the dots as a negative value.

s. Interchange the A memory dots as previously programmed. The same voltage reading should occur as a positive value.

2-7 TYPICAL MEASUREMENTS

The following are typical examples of time and voltage measurements which can be made with the System 1010. Many distinct measurements are possible. The few examples given are intended only to familiarize the operator with the techniques used.

a. Preliminary Procedure. It is assumed that CRT controls have been properly adjusted as in 2-5, and that a pulse generator with variable delay is used as a signal source. Program words not needed for a measurement might be omitted in descriptions, but a full 56-character program is assumed. Take the following preliminary steps.

(1) MEAS MODE to CONTINUOUS

(2) VERT POS and TRIG controls to PRESET

(3) A and B probes connected to appropriate signal output points. A probe No. 00 and B probe No. 10 are assumed.

(4) Trigger connected from signal source to System 1010 and TRIG POLARITY set to appropriate position. In general an attenuator is desirable in the trigger cable to minimize the interaction of reflections from the trigger input connector and the source. In any event the trigger level reaching the System 1010 should be at least 300 mV.

b. Risetime Measurement. To make a risetime measurement on the A channel signal, use the following procedure. When working with 50 ohm systems, include a good 50 ohm termination at the probe input. Refer to Figure 2-6.

(1) Enter RA1850T2
AP0011+1
ST10%A1+
SP90%A1+
AM01G99G

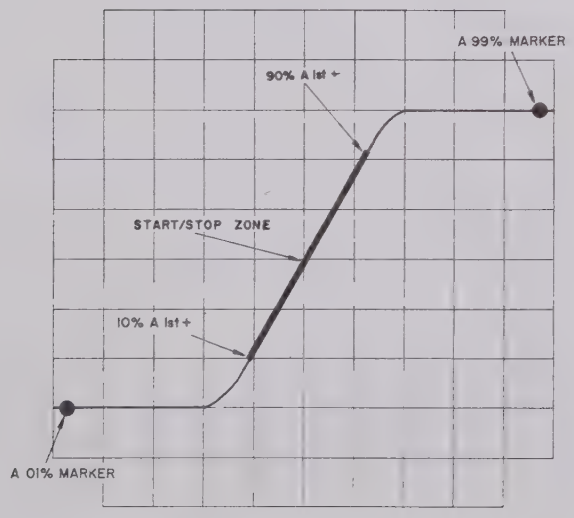

Figure 2-6 Risetime Measurement

(2) Edit time range, delay, vertical sensitivity and offset as necessary to position the positive transition on screen with several divisions of vertical deflection and with the time scale appropriate for measuring risetime. If the pulse has overshoot or ringing, position the memory reference points to define the baseline and the flat pulse top.

(3) Note the digital readout (DRO). This is the average of ten measurements of the 10% to 90% pulse risetime. Note that the start-stop or measurement interval between 10% and 90% points is intensified.

(4) If the 10% to 90% risetime including preshoot and overshoot is desired, program A Memory for the peak to peak mode. AM01P99P will let the memories automatically find the peaks of the full waveform displayed on screen.

c. Falltime Measurement. To measure transition time on a negative slope on A channel a similar procedure is used as follows. It is assumed that time scale, delay, vertical sensitivity and offset will be programmed as appropriate to properly display the signal.

(1) Enter RA1850T3
AP0011+1
ST10%A1–
SP90%A1–
AM01G99G

(2) Note the transition time on the DRO–the value is negative because 0% of the waveform is defined at the positive level, hence the stop point precedes the start point. The use of sweep mode "3" for an average-of-10 measurement saves time in the measurement cycle by terminating measurement sweeps at the end of the start-stop interval.

d. Pulse Width. To measure pulse width between 50% points on A channel, proceed as follows.

(1) Program RA####T# to display both leading and trailing edges of pulse.

(2) Program AP00##X# for proper sensitivity and offset to display the pulse over several vertical divisions.

(3) Enter ST50%A1+
SP50%A1–

(4) Program AM##G##G to place 0% marker on baseline and 100% marker on flat pulse top. If overshoot is of no consequence, the use of AM01P99P will avoid the need for accurate positioning.

(5) Note pulse width reading on DRO. If A memory is in the gated mode, the DRO will be positive for a positive pulse and negative for a negative pulse.

e. Period Measurement. The period or time per cycle on the A channel waveform may be measured as follows.

(1) Program RA####T# to display more than one period.

(2) Program AP00##X# for several divisions of vertical deflection.

(3) Enter ST50%A1+
SP50%A2+
AM01P99P

(4) Note period on DRO. A similar measurement could be made from A 1st–to A 2nd–transition.

f. Time Difference Measurement. To measure time difference between points on the A and B channel signals, proceed as follows (see Figure 2-7).

(1) Program RA####T#, AP00##X# and BP10##X# to display the positive transition on both channels with enough time offset for an accurate measurement.

(2) Enter ST50%A1+
SP50%B1+
AM01P99P
BM01P99P

(3) Note the difference between A and B signals on the DRO. The difference is positive in this example if A signal occurs first.

g. Time Delay at a Threshold. It is frequently desirable to measure time intervals at a threshold level, such as the delay between stimulus and response crossing the 1.5 V threshold for a TTL logic device. The following illustrates the procedure using Type 942 Remote Sampling Units with built-in programmable attenuators and chopper. The same measurement could be made with greater bandwidth using Type 941 Remote Sampling Units and the screw-on Type 663-41522 X10 Attenuators, but the 0% level would be the saturation voltage of the TTL device rather than ground unless an external chopper is used.

(1) Program RA1850T0
AP0052X#
BP1052X#
ST30+A1+
SP30+B1+
AM00R00G
BM00R00G

(2) Adjust time range and offset programming to obtain a display as in Figure 2-7.

(3) The DRO indicates time delay between channels at the +1.5 Volt TTL Threshold level (30% full scale at 0.5 V/div.).

h. Quantizing a Waveform. The following procedure illustrates how a waveform can be quantized or digitally reproduced for detailed manipulation by a computer. It is assumed that the time range and vertical programming given are appropriate to display the desired A channel waveform on screen.

(1) Enter RA1850A0
AP0011+0
AM01G10G
(Remainder of program is not functional and spaces may be entered if desired; a 56-character program is required to enable the edit mode).

(2) Observe voltage at 10% of sweep (relative to voltage at 01% of sweep) on DRO.

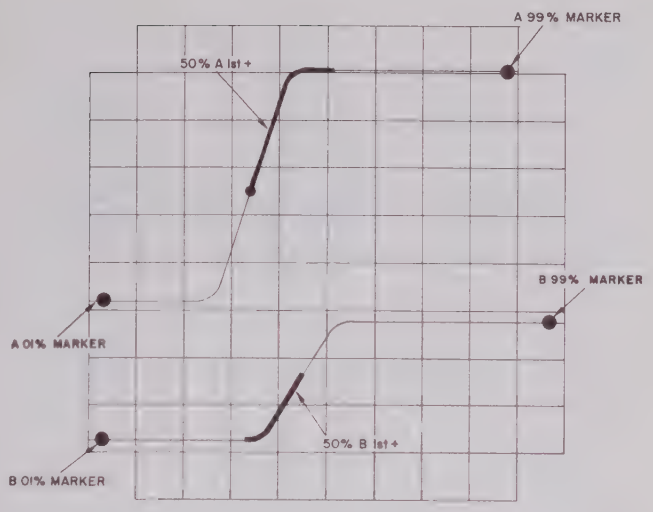

Figure 2-7 Time Difference Measurement

(3) Enter AM01G20G and observe voltage at 20% of sweep.

(4) Enter AM01G30G, AM01G40G, etc., until the voltage has been measured at each 10% increment of the sweep. The increment could be any value down to 1% if desired. A plot of any waveform observed on the screen can be made.

i. Positioning a Waveform by Computer. A computer-controlled system might be required to position a waveform on screen for a measurement without accurate knowledge of its location in time. For example, it might be desired to position the 50% level of the B 1st positive transition in Figure 2-7 at 50% of the sweep to make a risetime measurement, but the exact location of the transition depends on turn-on delay of the particular device under test. The following procedure allows the computer to locate the pulse and reprogram delay (either System 1010 or a programmable pulse generator) for the desired location.

(1) Program RA##30T0 and BP10##X# as required for correct time range and vertical sens. and offset, but with inadequate delay to bring the transition on screen. Assume that a delay of 30 to 90 is always adequate to bring the signal into position.

(2) Enter ST50%B1+
SP50%B2–
BM01P99P

(3) Note the DRO. If signal is not on-scale there will be no (non-zero) reading–enter RA##40T0.

(4) Note the DRO. After a number of incremental steps in delay the first + transition will come on scale and the measurement will start. Since there will be no 2nd negative transition on scale, the measurement will not stop. The DRO then reads time from 50% B1+ to the end of the sweep, with no units (overrange indication).

(5) Program a delay change appropriate to center the signal horizontally based on knowledge of 50% point from step 4. For example, if the readout in step 4 was 01.05 with RA1640T0 programmed, the 50%B1+ transition was 1.05 divisions from the end of the sweep and the new delay

required is 50–10.5+40, or 80 to the nearest programmable increment. Programming RA1680T0 will place the signal at mid sweep and the DRO will read 05.00.

(6) The desired measurement may now be programmed.

(7) Note that initially a voltage measurement in the reference mode (e.g., RA####B0, BM00R50G) would have given the voltage at 50% of sweep relative to ground to indicate whether the baseline or pulse top was on screen.

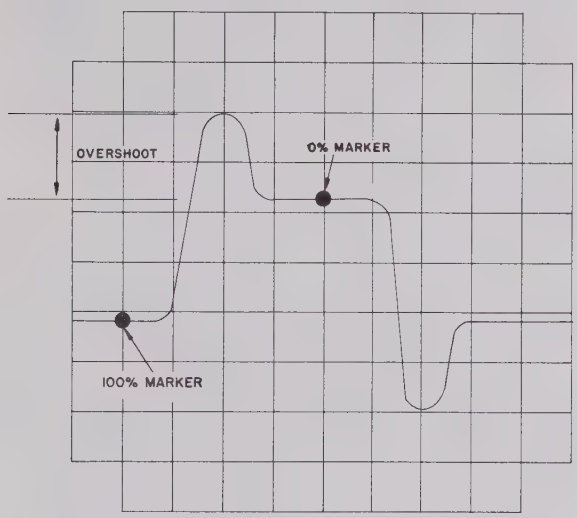

Figure 2-8 Overshoot Measurement

j. Overshoot Measurement. Waveform memory gating can be arranged to measure specific details of interest on a waveform by positioning the reference memory dots and using gated-peak combinations. The following procedure illustrates the measurement of pulse overshoot. Refer to Figure 2-8.

(1) To measure positive overshoot in Figure 2-8, enter:

RA####A0
AP00##X#
AM50G10P

(2) To measure negative overshoot in Figure 2-8, enter:

RA####A0
AP00##X#
AM50P90G

(3) The importance in gating lies in the negative peak detection by the 0% memory and the positive peak detection by the 100% memory. A gated-mode memory charges to the waveform voltage at the reference dot location. A peak-mode memory finds the appropriate (+ or –) peak in the interval between 0% and 100% memory reference dots.

k. Other Measurements. The System 1010 is useful in determining semiconductor parameters such as switching time storage, etc. Figure 2-9 shows settings for various time parameter measurements.

2-8 DIFFERENTIAL TIME MEASUREMENTS

When a computer is used to store test data taken by the System 1010, it also may be used to compute the difference between two or more previous time difference measurements. An example would be the change in storage time of a transistor under test. Consider a transistor driven by a pulse whose amplitude is 6 mA peak-to-peak. Storage time of 18.2 ns is measured in one test. The pulse drive is lowered to 3 mA peak-to-peak and storage time of 10.0 ns is measured, (no other parameters are changed except drive pulse amplitude). The difference in storage times is 8.2 ns and may now be data logged from the computer. (See Figures 2-10a and 2-10b.) Differential measurements may also be made with respect to given dc levels rather than a percentage of pulse amplitudes, by ground or voltage referencing procedures outlined previously.

2-9 PHASE SHIFT MEASUREMENTS

Digital readout and recording of phase shift information may be done by determining the time/cycle of the signal and then making a time measurement starting at a given percentage of amplitude on A channel signal (leading signal) and stopping at the same percentage of amplitude and slope on B channel signal (lagging signal). Knowing the time lag between the two signals and the time/cycle so conversion to 360° may be determined, allows phase shift to be measured to reasonably high frequencies (see Figure 2-11). The use of the peak-to-peak memory mode automatically places the 0% and 100% memories of A channel and B channel in the proper positions.

2-10 WARNING INDICATIONS

Two indications are provided to warn the operator that the intended measurement might not be correctly programmed. If a voltage measurement is off scale, or if a time measurement is not correctly programmed, an overrange condition will be indicated by the loss of units in the DRO. This indication will occur whenever the input voltage exceeds full scale, or whenever a stop pulse is not present in time measurement. For example, if a stop point is set at a voltage level beyond the peak voltage of a waveform, this level is never reached and the stop pulse does not occur. In this case, the internal logic will detect an off-scale condition and the units will drop out to indicate overrange.

A second indicator potentially important to a program is the NOT PRESET lamp and logic signal. If a program depends on controls being in the preset condition, the NOT PRESET lamp will signal the operator and a logic level will signal the computer when any of the controls with Preset detent is not preset.

2-11 AUTOMATIC WAVEFORM ANALYSIS

The ability to program measurement parameters in a very short time allows analysis of waveforms with a high degree of flexibility. The System 1010 may be used to drive external data recording and digital comparison equipment for rapid comparison of data and go/no-go testing of components or circuits. If a computer is available for use with the instrument, a large number of tests may be programmed together with appropriate limits for each parameter. For example, the System 1010 may be programmed in sequence

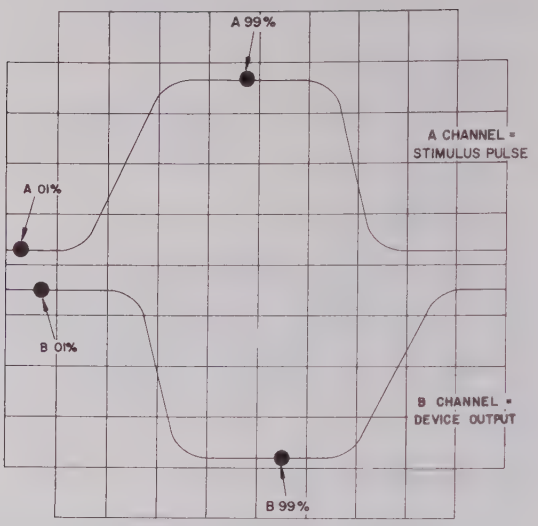

Measurement *	START	STOP
Rise Time A	10% A 1st +	90% A 1st +
Fall Time A	90% A 1st -	10% A 1st -
Width A	50% A 1st +	50% A 1st -
Rise Time B	10% B 1st -	90% B 1st -
Width B	50% B 1st -	50% B 1st +
Delay	10% A 1st +	10% B 1st -
Turn-on	10% A 1st +	90% B 1st -
Turn-off	90% A 1st -	10% B 1st +
Storage	90% A 1st -	90% B 1st +

*(See Figure 2-9)

Figure 2-9 Semiconductor Parameter Measurement

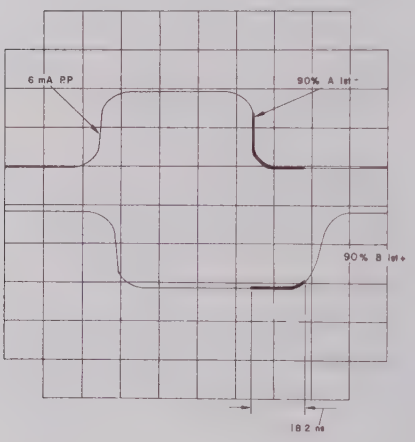

a. Storage Time With 6 mA Pulse

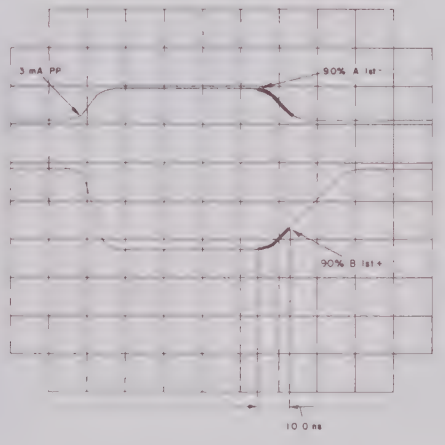

b. Storage Time With 3 mA Pulse

Figure 2-10 Differential Time Measurement

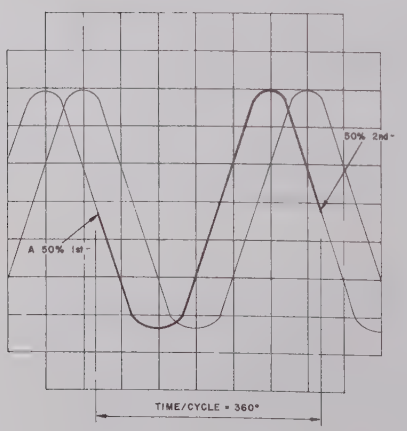

a. Time/Cycle Measurement

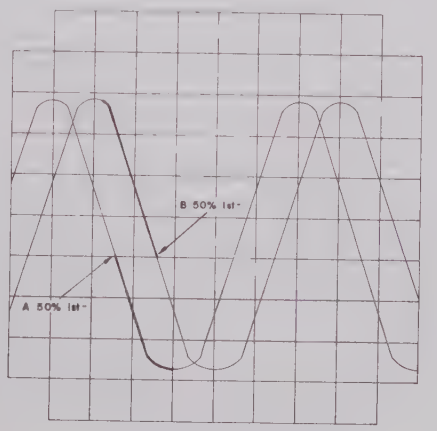

b. Time Lag Measurement

Figure 2-11 Phase Shift Measurement

to measure transistor risetime, falltime, storage, etc., in successive tests with limits set for each parameter. If any measurement is beyond the programmed limits, the measurement sequence can be stopped and the device rejected. In a more sophisticated system, one waveform can be used to analyze the performance of a component in several parameters by making sequentially programmed measurements in small increments and comparing each measurement to preset limits.

Consider a series of tests to analyze the performance of a pulse transformer. In this case, risetime, overshoot and ringing, droop, and falltime are the parameters of interest. The following general procedure is used to measure and compare the performance of each transformer:

a. Prepare a series of programs which measure the 0% to 100% voltage of the waveform. This is done as in 2-6 (h) (assuming the A channel waveform is the one used). The first test would set A0% at 0.1 divisions and A100% at 0.1 divisions. The succeeding tests set A0% at the same point and advance A100% to 0.2, 0.3 divisions, etc. The program would continue until on the last test A100% is at 9.9 divisions.

b. Establish limits for the parameters of interest in terms of the result obtained in the measurements. In this case the result will be a voltage difference between 0% and 100% points. Program the computer with the measurement and test limit data. An example of a typical pulse waveform and the envelope of the test limits is shown in Figure 2-12.

c. If desired, program the computer to stop tests if any result is outside the limits set for that point on the waveform.

2-12 TIME MEASUREMENTS: FAST REFERENCE METHOD

a. General. For time measurements only, and using Type 942 probes only, the following procedure will decrease measurement time by up to half of normal by eliminating the need for a memory sweep.

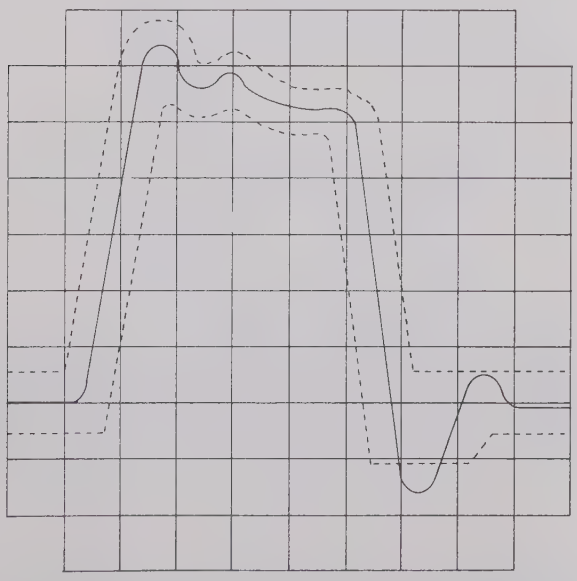

Figure 2-12 Automatic Waveform Analysis

b. Procedure. With two Type 942 probes connected to the System 1010, enter the following program:

```
RA####T#
AP####X#
BP####X#        X = any valid letter
ST##*X#X        # = any valid number
SP##*X#X        * = "+" or "-" only
AM##R##X
BM##R##X
```

Under the conditions, the measurement time is the time that it takes the signal to cross between the two thresholds that are both referenced to ground, via the reference mode (R). As soon as the 0% memory has been stored (before the sweep even starts) all the information required to make the measurement is available; therefore, no memory sweep is required.

c. Programming Considerations.

(1) If a voltage measurement is being made, rather than a time measurement, the System 1010 will not make the proper measurement if the characters shown in step b. for ST, SP, AM, and BM are used. Changing any one of the four specified characters ("+" or "-" for ST and SP, "R" for AM and BM) will allow a valid voltage measurement to be made. For example, if the "+" or "-" in either ST or SP is changed to "%", a good measurement can be made.

(2) If a time measurement is being made, and the decreased measurement time is desired, then the four characters specified in step b. must all be as shown. Otherwide, the usual two sweeps will be required.

(3) If the shortest possible measurement time is desired, the Short Sweep option should be used. This means programming a 1,3,5 or 7 in the last digit of the RA program. This will not degrade the measurement in any way, but cuts measurement time by as much as 40%.

2-13. INSTALLATION-MODEL 1011

a. General. Install the Model 1011 in a location convenient to the test setup and within cable length (20 feet) of the System 1010 it is being used with. Be sure that adequate room is left at the rear of the unit for connection of programming lines, power cable, and trigger input cable; and at the front of the unit for up to 20 probe cables.

b. Rack Mounting. The Model 1011 is designed to be rack-mounted in a standard cabinet using the slides supplied with the instrument. Refer to Figure 2-13 for mounting dimensions.

c. Power Requirements. The Model 1011 is factory-wired for operation from 100, 115, or 230 V, 50-60 Hz, two-wire, single-phase primary power. Check the decal on the rear panel of the instrument to determine which voltage the unit is wired to accept. Be sure that the power source is the correct voltage and frequency before connecting the Model 1011.

To protect the operator from electrical shock, the instrument is supplied with a 3-conductor power cord which grounds the instrument chassis when connected to an appropriate receptacle. The offset round pin on the male power cord

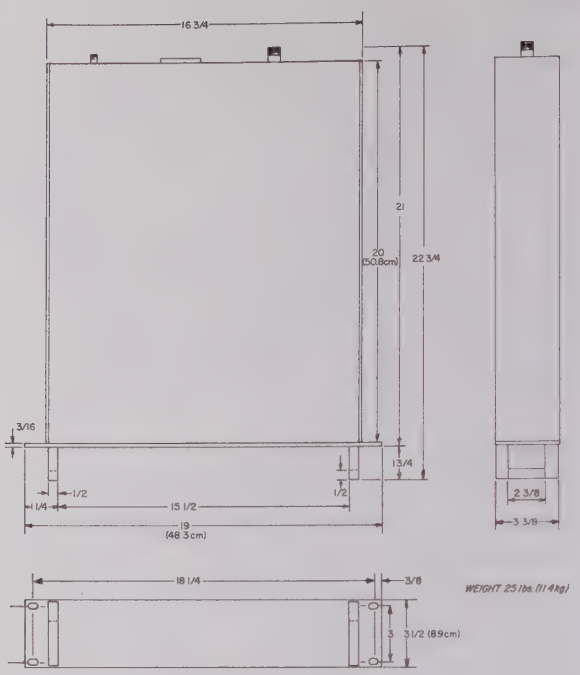

Figure 2-13 Model 1011 Multiplexer Outline and Mounting Dimensions

connector is the ground pin. To make use of this safety feature when operating the instrument from a two-contact outlet, use an adaptor and connect the adaptor pigtail to a suitable earth ground point.

d. Conversion to 100 V or 230 V Operation. The standard Model 1011 is wired to operate from 115 V primary power sources. The instrument may be converted for use with either 230-volt or 100-volt power sources by changing the power transformer primary winding. Figure 2-14 shows the changes required.

2-14 FRONT PANEL CONTROLS AND INDICATORS – MODEL 1011

(Refer to Figure 1-2)

a. POWER pushbutton, when depressed, lights up and turns on primary power to the instrument.

b. PROBE NUMBER switch is set to the appropriate group of twenty numbers, e.g. 40-59, so as to accept the correct A or B Probe address commands from the System 1010.

2-15 PROGRAMMING AND INTERFACE CONSIDERATIONS – MODEL 1011

a. General Interface Considerations. All interface connections (except the probe cable connections) are on the rear panel (See Figure 2-15). All programming is done via the System 1010. Connectors J102/J103 on the Model 1011 Probe Multiplexer are loopthrough programming connectors that allow the program lines to be connected to up to five cascaded Model 1011's and to other units.

b. Program Inputs and Outputs. The Model 1011 Probe Multiplexer is connected to the System 1010, via J106 on the 1010. This connection provides all program control lines and signal lines, to and from the probes. The strobe pulse is fed into the multiplexer from either the System 1010 A or B channel ports (J107 or J108). If more than two multiplexers are to be used, a trigger splitter must also be added to the system.

The signal/program cables are "party lined" to each multiplexer in the system. Strobe signals are all independent lines (except to the splitter) each terminating in a given multiplexer. The probes connect to the multiplexer in the same manner that they connect to the System 1010. The only difference is that each multiplexer has connections for 20 probes. The connections are numbered 00 to 19 on each unit. These numbers may not be the program numbers for the probes. The program numbers are determined by adding the lowest number on the PROBE NUMBER switch position being used to the number of the probe connection. As an example, a probe connected to connector No. 14 in a multiplexer with the PROBE NUMBER switch set to 40-59, has the program number 54. Good bookkeeping is a must for successful use of the System 1010 when using multiplexers.

c. Operation. The operation of a Model 1011 multiplexer consists of connecting the probes to the multiplexer, connecting the multiplexer to the System 1010 (and trigger splitter, if needed), setting the PROBE NUMBER switch to the desired position and depressing (turn on) the POWER switch. A typical System 1010 setup using multiplexers is shown in Figure 2-4.

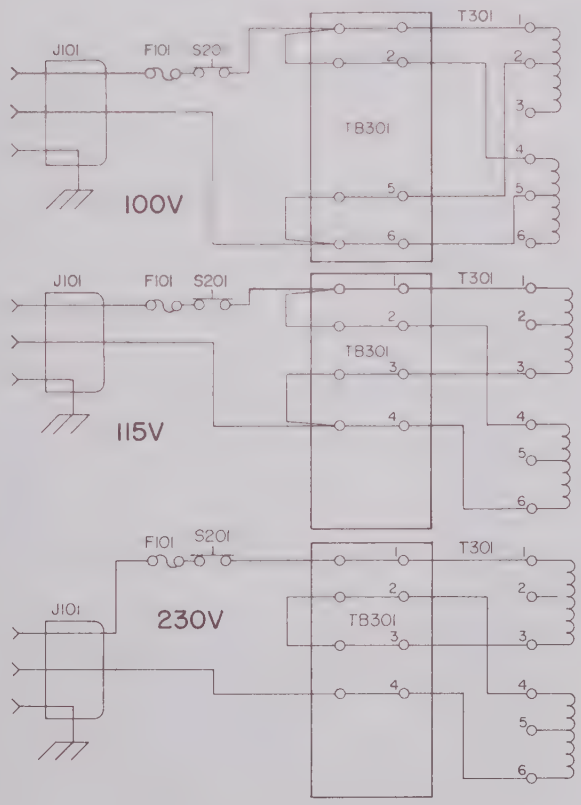

Figure 2-14 Model 1011 Line Voltage Conversion

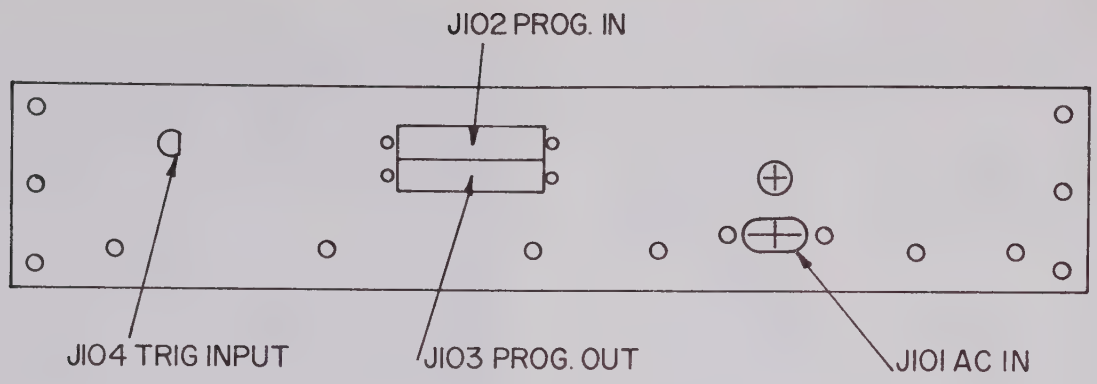

Figure 2-15 Model 1011 Rear Panel Connections

Table 2-1 Program Input Connections
J102(IN) & J103(OUT)(DBM-25S)

Pin	Signal	
1	ASCII Bit 1	Input
2	GND	
3	ASCII Bit 2	Input
4	GND	
5	ASCII Bit 3	Input
6	GND	
7	ASCII Bit 4	Input
8	GND	
9	ASCII Bit 5	Input
10	GND	
11	ASCII Bit 6	Input
12	GND	
13	Ready Flag	Output (J102 only)

Pin	Signal	
14	ASCII Bit 7	Input
15	GND	
16	ASCII Bit 8	Input
17	GND	
18	COMP' Clock	Input
19	GND	
20	Key Board Clock	
21	GND	
22		
23	+5 V	Output
24	Computer Flag	Input (J102 only)
25	GND	

Table 2-2 Computer Control Connections
J109 (DCM–37S)

Pin	Signal		
1			
2			
3			
4	DRO Output*	1	
5		2	
6		3	
7		4	
8		5	
9		6	
10			
11	End of Program		Output
12			
13			
14			
15	Meas. in Progress		Output
16			
17			
18	GND		
19	Data Clock		Output

Pin	Signal	
20		
21		
22	Remote Single Meas.	Input
23		
24		
25	Not Preset	Output
26		
27		
28	*Data Gate	Output
29		
30	Prog. Command	Input
31		
32		
33		
34		
35	+5 V	Output
36		
37	GND	

*recycles every 12.3 ms if MIP is false.

*Outputs 1-6 are ASCII bits 1-6. ASCII bits 7 and 8 are not required and are not present in the data output.

Table 2-3

J110 BCD OUTPUT OPTION

FROM J1			SIGNAL	TO J110	
Pin	1		+ AND - ("High" = "+", "Low" = "-")	Pin	13
Pin	2		BIT 1000	Pin	1
Pin	3		OVER RANGE ("Low" indicates overrange)	Pin	14
Pin	4		HUND - BIT 800	Pin	2
Pin	5		GND	Pin	15
Pin	6		BIT 200	Pin	3
Pin	8	*HUND	BIT 100	Pin	4
Pin	10		BIT 400	Pin	5
Pin	12		BIT 80	Pin	6
Pin	14		BIT 20	Pin	7
Pin	16	*TENS	BIT 10	Pin	8
Pin	18		BIT 40	Pin	9
Pin	20		BIT 8	Pin	10
Pin	22		BIT 2	Pin	11
Pin	24	*UNITS	BIT 1	Pin	12
Pin	26		BIT 4	Pin	24

*All Bits are positive true.

Table 2-4

J106 MULTIPLEX CONNECTOR

Pin	Signal	To
1	1	XA4–1–17
2	2	XA4–1–U
3	4	XA4–1–V
4	8 A Probe	XA4–1–16
5	10	XA4–1–13
6	20	XA4–1–P
7	40	XA4–1–R
8	80	XA4–1–12
9	A x 10 ATTEN	XA2–2–h
10	A x 1 ATTEN	XA2–2–f
11	AES COAX GND	A1–J5
12	AES COAX	A1–J5
13	AES COAX GND	A1–J5
14	A CHOPPER	XA7–1–e
15	BES COAX GND	A1–J8
16	BES COAX	A1–J8
17	BES COAX GND	A1–J8
18		
19	LOGIC GND	XA9–A

Pin	Signal	To
20	1	XA4–1–d
21	2	XA4–1–25
22	4	XA4–1–26
23	8	XA4–1–c
24	10	XA4–1–Z
25	20 B Probe	XA4–1–21
26	40	XA4–1–22
27	80	XA4–1–Y
28	B x 10 ATTEN	XA2–1–U
29	B x 1 ATTEN	XA2–1–T
30	AFB COAX GND	A1–J6
31	AFB COAX	A1–J6
32	AFB COAX GND	A1–J6
33	B CHOPPER	XA7–1–h
34	BFB COAX GND	A1–J9
35	BFB COAX	A1–J9
36	BFB COAX GND	A1–J9
37	GND SIG	XA9–A

(B)

Table 2-5

1010 PROGRAMMING FIELD CODES

Field Codes	Description	Example
RA####X#	Time Range/Delay/Mode	RA2901T0
AP####X#	A Probe/Vertical	AP1020+5
BP####X#	B Probe/Vertical	BP1120–5
ST##XX#X	Start Discriminator	ST50%A1+
SP##XX#X	Stop Discriminator	SP50+B1–
AM##X##X	A Memory	AM15G85P
BM##X##X	B Memory	BM10R90P
GO	Measurement Command	
	X Denotes Alpha-Character	
	# Denotes Number	

NOTE

When using the optional keyboard (E-H part number 146-41942), the capital alphabet must be used on the keyboard (i.e., the SHIFT key must be used) to enter the alphabetic characters that are part of the program input.

Table 2-6

PROGRAMMING FORMAT – TIME RANGE

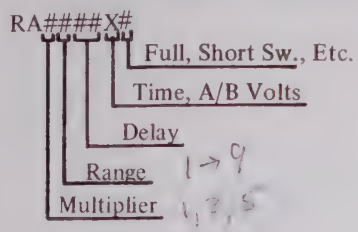

RA		#	#	##	X	#
Units	Sens/ Div	Mult	Range	Delay	Mode (1)	Sweep (2)
ns/ div	.2 .5 1	2 5 1	9	00 thru 99 (% of "1" Scale)	T (Time) A (Volts) B (Volts)	0 Full/Sing 1 Short/Sing 2 Full/Avg 10 3 Short/Avg 10 (with digital averaging) 4 Full/Sing 5 Short/Sing 6 Full/Avg 10 7 Short/Avg 10 (No digital averaging)
	2 5 10	2 5 1	8			
	20 50 100	2 5 1	7			
µs/ div	.2 .5 1	2 5 1	6			
	2 5 10	2 5 1	5			
	20 50 100	2 5 1	4			
ms/ div	.5 1	5 1	3	Realtime Sampling 00 Delay		
	2 5 10	2 5 1	2			
	20 50 100	2 5 1	1			

1. See Tables 2-10 and 2-11 for format details.

2. Use digital averaging (0-3 Sweep) with extreme caution when "T" Mode is programmed. If the 1010 misses a sweep, the averaged time value will be 10% too short.

Table 2-7

PROGRAMMING FORMAT - PROBE SELECTION AND VERTICAL

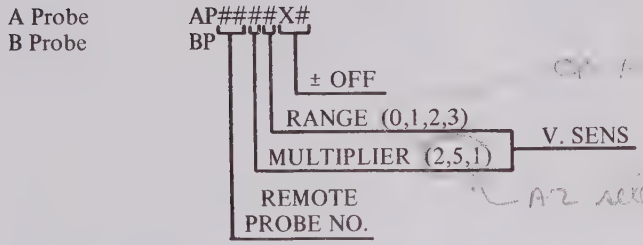

	PROBE NO.	V. SENS		POL	OFF	SENS /DIV	UNITS	ATTEN
		MULT	RANGE					
AP	##	#	#	X	#			
A Probe	00 thru ##	2 5 1	0	+	0 thru 9	2 5 10	mV/Div.	X 1
		2 5 1	1	−		20 50 100		
		2 5 1	2	(tenths of a Volt at Sample Bridge)		.2 .5 1.0	V/Div.	X 10
		2 5 1	3			2 5 10		X 100

Table 2-8

PROGRAMMING FORMAT - START/STOP POINTS

ST##XX#X
SP

ST	##	X	X	#	X
Start	00 thru 99	% (0%-99% Amp) + or – { 0.0 thru 9.9 vertical scale div from 0% of waveform	A B (Channel)	1 = 1st 2 = 2nd (Transition)	+ – (Slope)

Table 2-9

PROGRAMMING FORMAT - MEMORY

AM##X##X
BM

AM	##	X	##	X
A MEM	01 thru 99 % of FS Time	G = Gated P = Peak R = Ref (Chop)	01 thru 99 % of FS Time	G P

Table 2-10

TIME RANGE FORMAT

	Sens /div	Mult	Range	Full Scale Reading 12345	Decimal Point Pos.	Fast Ramp
ns/div	2	2	9	1.998 ns	2	20 ns
	.5	5		04.98 ns	3	
	1	1		09.99 ns	3	
	2	2	8	19.98 ns	3	200 ns
	5	5		049.8 ns	4	
	10	1		099.9 ns	4	
	20	2	7	199.8 ns	4	2 µs
	50	5		0498. ns	5	
	100	1		0999. ns	5	
µs/div	.2	2	6	1.998 µs	2	20 µs
	.5	5		04.98 µs	3	
	1	1		09.99 µs	3	
	2	2	5	19.98 µs	3	200 µs
	5	5		049.8 µs	4	
	10	1		099.9 µs	4	
	20	2	4	199.8 µs	4	2 ms
	50	5		0498. µs	5	
	100	1		0999. µs	5	
ms/div	.5	5	3	4.998 ms	1	Sampling Rate 200 kHz
	1	1		9.999 ms	3	100
	2	2	2	19.98 ms	3	50 kHz
	5	5		049.8 ms	4	20
	10	1		099.9 ms	4	10
	20	2	1	199.8 ms	4	5 kHz
	50	5		0498. ms	5	2
	100	1		0999. ms	5	1

Table 2-11

VOLTMETER FORMAT

	Sens /div	Mult (2)	Range	Full Scale Reading (1)	Decimal Point Pos.
mV/div	2	2	0	19.98 mV	3
	5	5		049.8 mV	4
	10	1		100.0 mV	4
	20	2	1	199.8 mV	4
	50	5		0498. mV	5
	100	1		1000. mV	5
V/div	.2	2	2	1.998 V	2
	.5	5		04.98 V	3
	1	1		10.00 V	3
	2	2	3	19.98 V	3
	5	5		049.8 V	4
	10	1		100.0 V	4

1. Assume Full Scale voltage is 1000 counts.
2. Assume 1, 2, 5 multiplier is defined by the 2 and 4 bits only.

SECTION 3
THEORY OF OPERATION

3-1 SAMPLING TECHNIQUE

The use of sampling to analyze waveforms is similar to the use of a stroboscopic lamp to analyze the motion of rotating or vibrating objects. The "strobe" lamp creates a short flash of light which can be considered a sample of the physical position of the object being analyzed. If the flash of the lamp is varied in time with respect to the motion of the object, a complete analysis of the object's motion can be made.

The same technique can be used to analyze electrical phenomena. In this case, a "strobe" is used to sample the voltage level of a waveform. By varying the time position of the strobe with respect to the waveform, a point-by-point analysis can be made. By using a large number of samples and plotting these samples on a storage device such as a cathode-ray tube, an exact replica of the waveform can be produced for examination.

3-2 BASIC SAMPLING SYSTEM

a. General. A sampling system in its simplest form is shown in Figure 3-1. Each time the strobe generator sends a pulse to the sampling circuit, the amplitude of the input waveform at the time of the strobe appears at the output. This system is not coherent, and the shape of the waveform could not be determined from the sampled output. Certain information, however, could be determined from the output. For example, if a peak detector followed the sampled output, the peak amplitude of the waveform could be found.

Figure 3-2 shows a system which is coherent. Each time the input signal recurs, the strobe generator is triggered and a sample is taken of the waveform. In this system, the sampling is coherent, but only one point on the waveform can be sampled since the strobe always occurs at the same time with respect to the input signal.

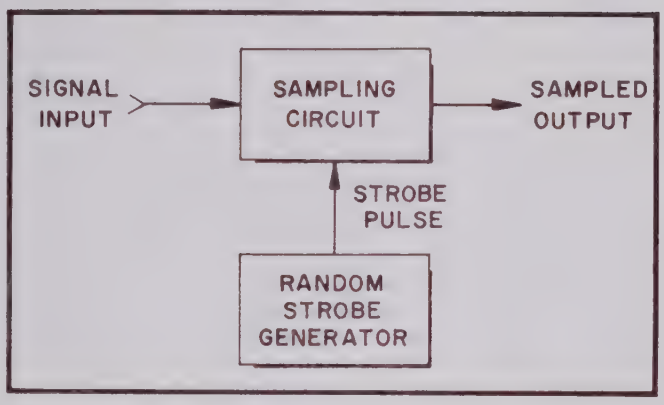

Figure 3-1 Basic Sampling System

Figure 3-3 shows a more useful system. In this case the input signal triggers a variable delay generator. Each sample occurs slightly later in time compared to the previous sample. If enough samples are taken, the whole waveform can be analyzed.

In the System 1010, the delay generator consists of two circuits: a linear ramp generator whose output is called the "fast ramp" and a staircase generator whose output is called the "slow ramp." (See Figure 3-4.) Each time the delay generator circuit is triggered, the fast ramp starts from its zero level and rises linearly at one comparator input. The slow ramp is connected to the other comparator input. When the level of the fast ramp reaches the level of the slow ramp, the comparator triggers the strobe generator and a sample occurs. At the same time, the fast ramp is reset to zero and the slow ramp is advanced one step. In this way a linearly increasing delay results, since the fast ramp must rise further

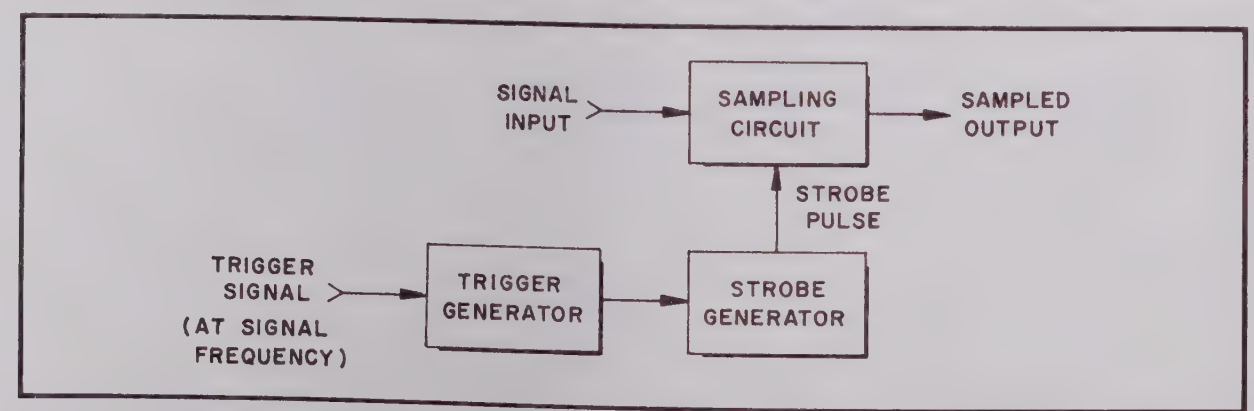

Figure 3-2 Coherent Sampling System

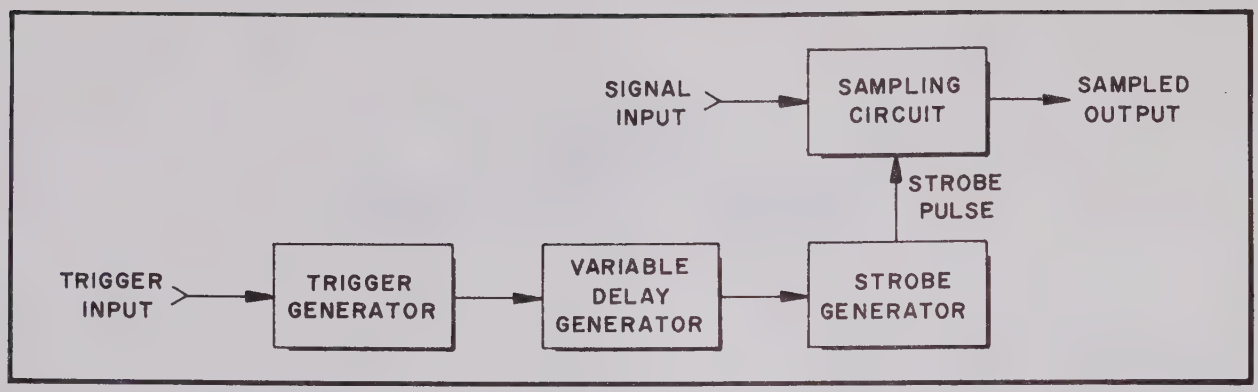

Figure 3-3 System With Delay

each time to coincide with the level of the slow ramp. By adjusting circuit constants, it is possible to achieve a useful relationship between the real time delay and the apparent or equivalent time delay. For example, if the fast ramp rises at 100 mV/ns and each step on the slow ramp is exactly 100 mV, then the time difference between samples is 1 nanosecond. The actual time difference between samples is not 1 ns, but the time between input trigger pulses. On the input waveform each sample occurs 1 ns later in "equivalent" time. Figures 3-5 and 3-6 illustrate this relationship.

If the output of the sampling circuit is presented on the vertical axis of a cathode-ray tube, the height of the display represents the amplitude of the waveform at the time of each sample. If the slow ramp is connected to the horizontal axis of the CRT, an X-Y presentation will occur, representing the sampled replica of the waveform under analysis. Since the equivalent time between steps of the slow ramp is known, the calibration of the horizontal axis can be determined. The vertical calibration can be determined by knowing the relationship between the sampled output and the actual level of the waveform.

b. Digital Measurement System. The connections described in Section 3-2a allow a visual presentation of the sampled waveform. In the System 1010 this is carried further, by using the digital nature of the circuits for digital analysis. It has been previously stated that one step on the slow ramp represents a fixed time difference between points on the sampled waveform. If the number of steps between two points on the waveform are counted digitally, exact time differences can be determined. In the previous example, a fast ramp slope of 100 mV/ns and a slow ramp step increment of 100 mV produced an equivalent time between samples of 1 ns. Assume that a time measurement of the 10-90% risetime of the waveform is required. If the number of samples between the two levels is counted, the required measurement is accomplished. Of course, the next problem is the exact determination of the 10% point to begin counting and the 90% point to stop counting. Figure 3-7 shows this circuit in simplified form. For this measurement two complete sets of samples are required. Assume that the slow ramp is derived from three decimal counters capable of counting from 000 to 999. The output of the counters is connected to a digital-to-analog converter which converts the BCD output of the counters to an equivalent voltage. The output of this converter is a 1000-step staircase, with each step corresponding to one sample. The staircase output is connected to the comparator in the strobe generator circuit. The sampled output is also connected to two comparators

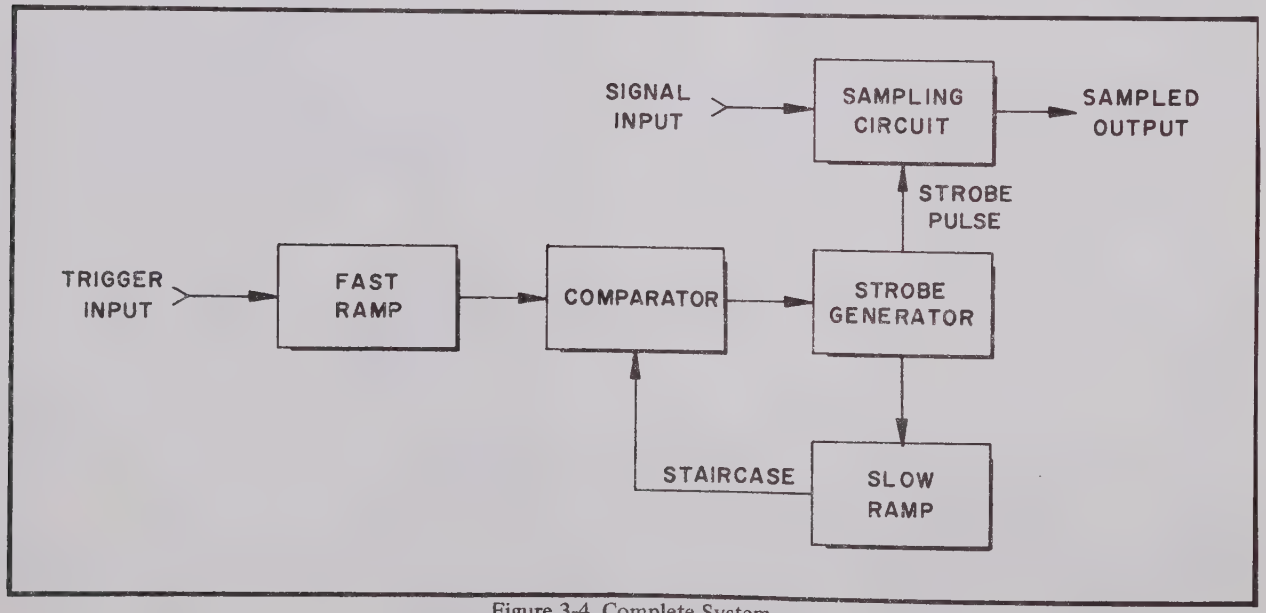

Figure 3-4 Complete System

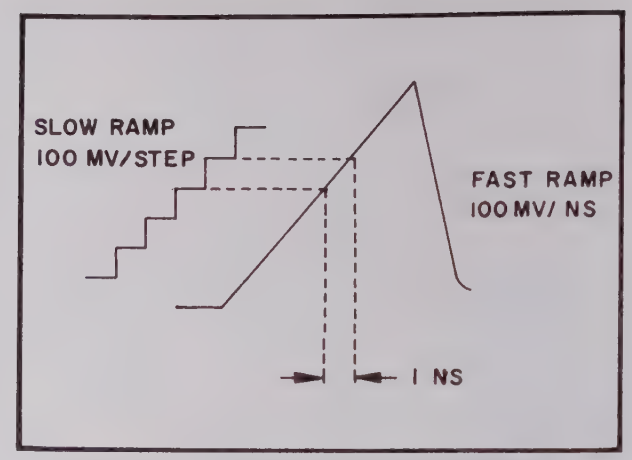

Figure 3-5 Fast Ramp-Slow Ramp Relationship

which control the gate circuit, which in turn controls the pulses going to the counter. It is possible to use the signal itself for a reference in a risetime measurement. For example, peak detectors following the output could be used to determine the maximum amplitude of the waveform. This information in turn could be stored in memory (sample and hold) circuits for use in determining the measurement start and stop points. Such a circuit is shown in Figure 3-8. The output of the memory circuits, referred to as the 0% and 100% levels for the risetime measurement, is applied to a voltage divider circuit which has outputs at 10% and 90%. The output of the voltage divider goes to two comparator circuits which have their other comparison inputs connected to the sampling circuit output. The comparator circuits control a gate circuit which controls the flow of sampling (strobe) pulses into a set of digital counters. According to our initial example, each sampling pulse represents 1 ns of equivalent time.

This measurement scheme requires two sweeps, or complete sets of 1000 samples each. In the first set of samples the peak detectors determine the 0-100% voltage; in the second set, the actual measurement is made. The sequence of events is as follows: the counter gate is shut off until the signal level at the sampling circuit output reaches the 10% level. At that point the start comparator fires and the gate opens. The counter now starts accumulating sampling pulses. When the signal level reaches the 90% level, the stop comparator fires and the gate closes. The number of sampling pulses stored in the counter represents the time (in nanoseconds) between the 10% and 90% levels.

c. **Variable Reference System.** The circuit just described in Section 3-2b is limited in its utility, since only the peak amplitude of the pulse is used as a reference. If the pulse under observation has 10% overshoot, the accuracy of the 10-90% risetime becomes questionable. The circuit shown in Figure 3-9 allows the selection of any point on the waveform for 0 and 100% references. The 0% and 100% D/A converters are capable of generating analog voltages representing the maximum and minimum levels of the slow ramp, and discrete levels in between. In practice the operator could position the 0% and 100% reference samples at any point on the slow ramp. In this way, the reference points could be moved to points on the waveform beyond any ringing or overshoot. Again, in the system described, two complete cycles of the slow ramp are required, each cycle consisting of 1000 samples.

3-3 OVERALL CIRCUIT DESCRIPTION

a. **General.** Figure 3-10 shows an overall simplified block diagram of the System 1010. In the previous sections, the basic voltage sampling and time measurement system were discussed. Referring to the overall block diagram, the basic system can still be seen, but a number of new circuits have been added. Instead of one input signal, the instrument has two channels, with two sets of memories. Timing logic, remote programming logic and CRT display circuits are also added. The following paragraphs describe major circuit blocks. Figures 3-11 through 3-18 provide added details to the simplified block diagram.

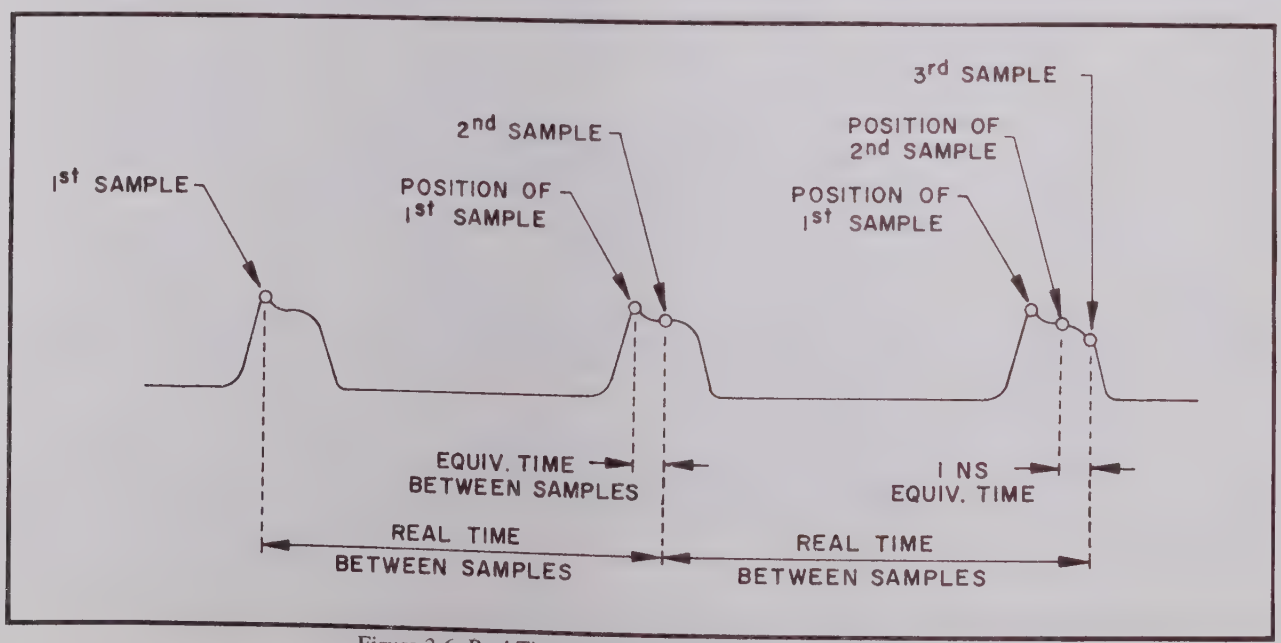

Figure 3-6 Real-Time and Equivalent Time Relationships

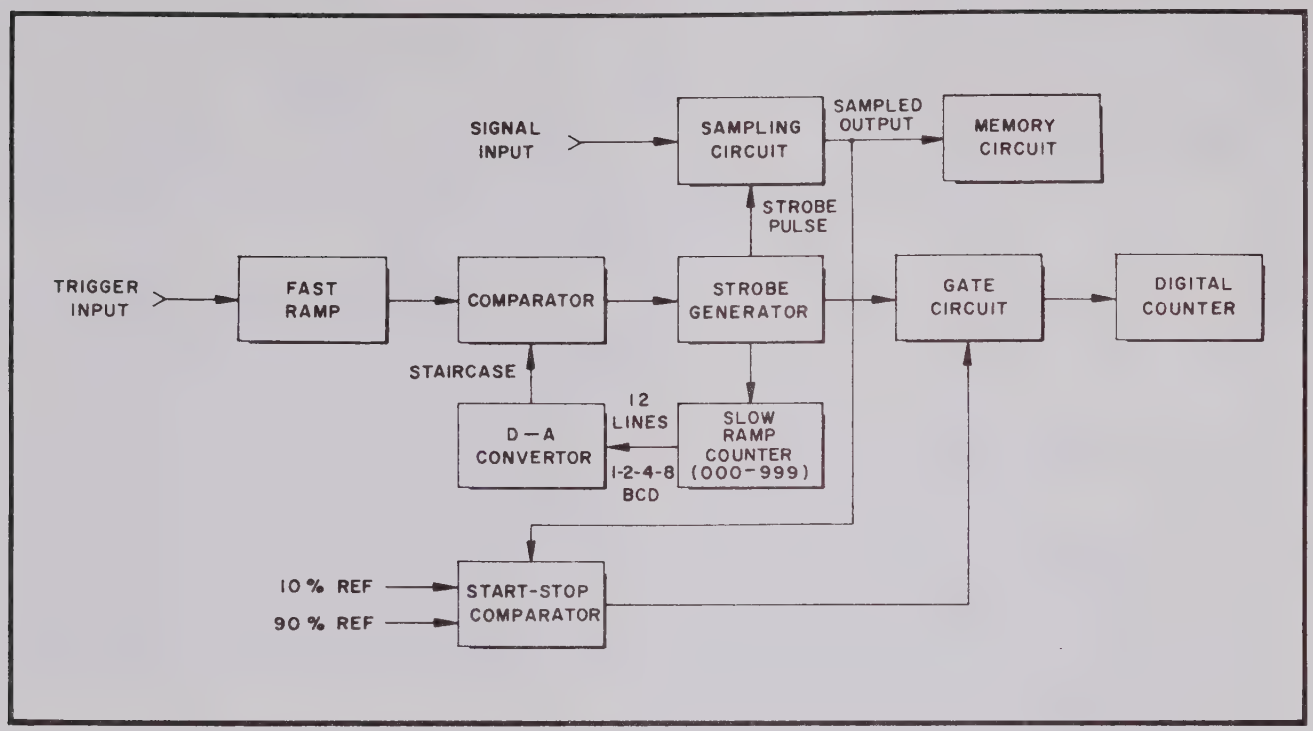

Figure 3-7 Digital Measurement System

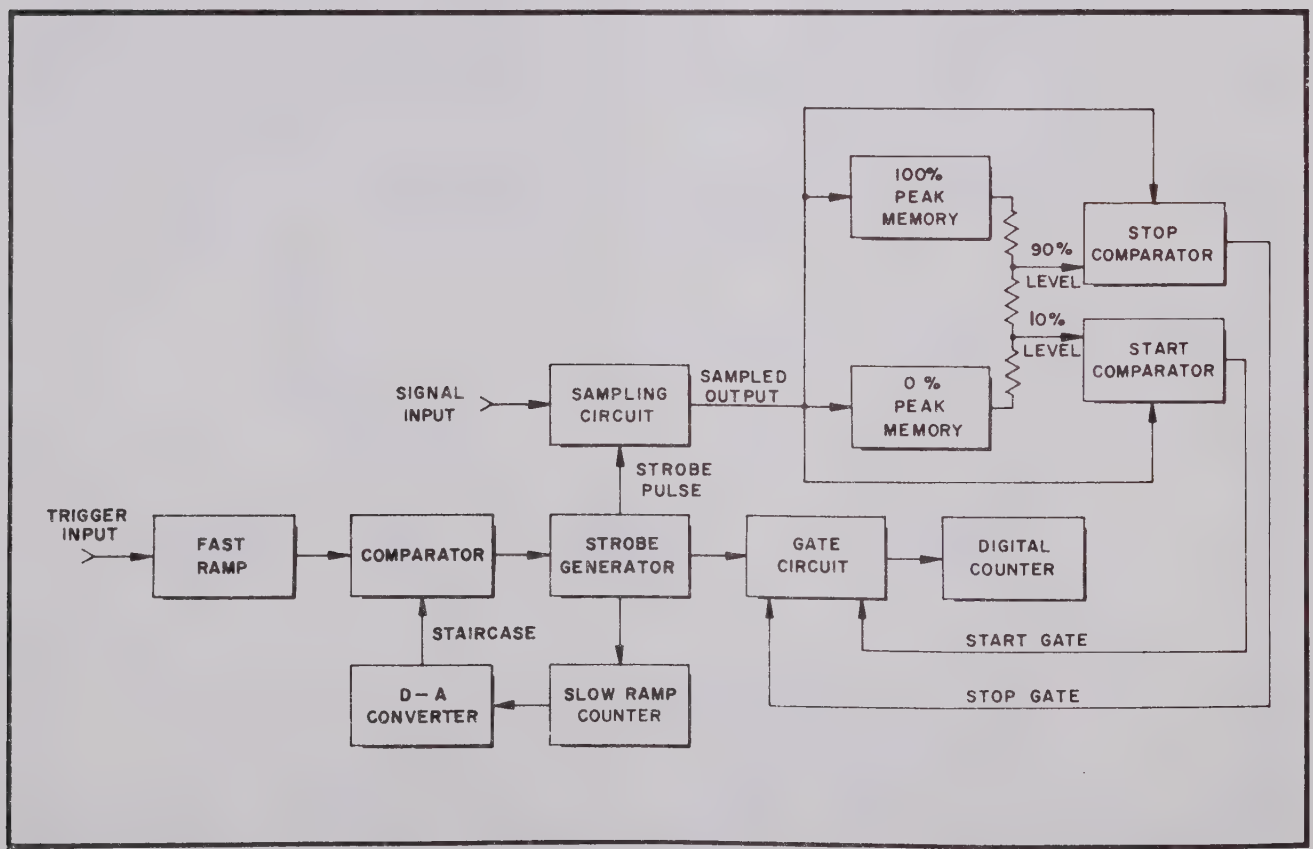

Figure 3-8 Digital Measurement System With Reference

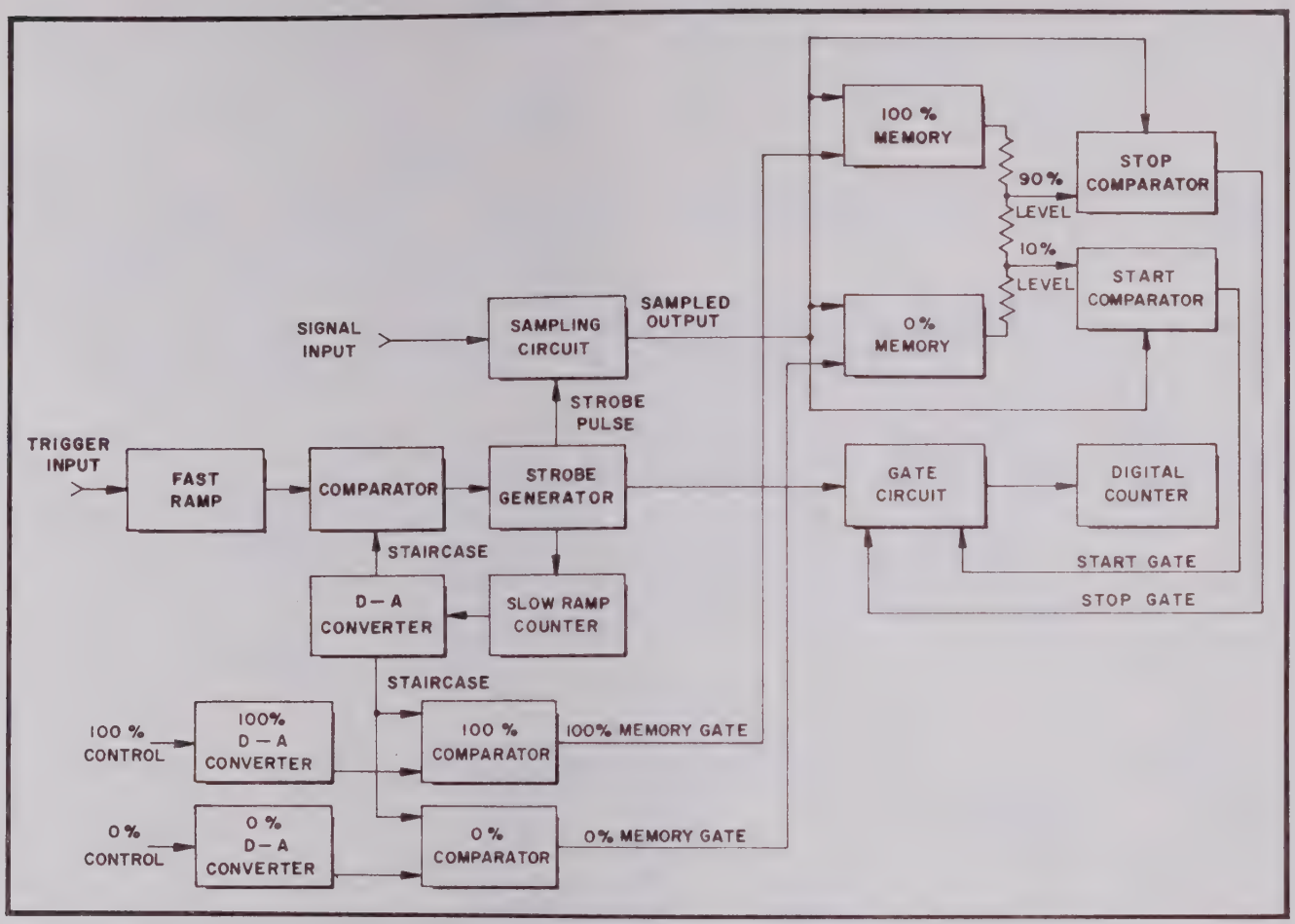

Figure 3-9 Variable Reference System

b. Sampling Units. The input signal is sampled by remote sampling units which are connected to the main instrument by cables. These units contain the sampling circuits previously described, but are triggered by strobe generator circuits in the main instrument. A total of 100 units may be connected at one time through the use of 5 of the 1011 20-probe multiplexers, but only two are used, one for each channel. Consisting of sampling bridge and amplifier, the units provide a sampled output to the stretcher circuits in the main instrument. In the case of the Type 942 sampling unit, an internal attenuator circuit is used, controlled by the sensitivity programming of the System 1010.

c. Signal Switching and Preamplifier. The sampled output from any 1011 only probes is switched through a relay matrix to preamplifier circuits for each channel. The output of the preamplifiers drives the memories.

d. Memory Circuits. The preamplifier outputs are connected to two memories in each channel. Each memory stores, or "remembers" the level of the sampled waveform at the time of the 0% or 100% reference point. Two similar circuits are used for each signal. One memory stores the 0% level; the other stores the 100% level.

e. Start-Stop Switch. The output of the memories goes to a relay matrix which selects the signals to be applied to the start-stop dividers. The time measurements can be started or stopped with reference to either input signal.

f. Start-Stop Divider. The output of the start-stop switch is applied to resistive divider networks in each channel. These networks divide the voltage difference between 0% and 100% levels into 1% increments. The division ratio is controlled by relays driven from the programming memories. The resistive networks are also used to provide offset voltages when a time measurement is made with respect to a voltage level.

g. Start And Stop Comparators. The start and stop comparators control the flow of clock pulses into the digital counter by providing start and stop pulses at the points selected for measurement. One side of each comparator is connected to the reference level from the start and stop dividers. The other side of the comparator is connected to the signal selected for start and stop level reference. For example, if a time measurement is made between 50% points on the leading edges of the channel A and channel B signals, the start comparator has one input from 50% of the channel

A 0-100% voltage and the other input from the channel A signal itself. The stop comparator has one input from 50% of the channel B 0-100% voltage and the other input from the channel B signal. When the two comparator inputs coincide, the comparator triggers, and the output pulses put the clock gate into the required start or stop state.

h. Digital Counter and Readout. The output of the clock gate drives a set of four cascaded decimal counters. These counters store the clock pulses accumulated during the measurement period.

i. Analog Display Circuits. The cathode-ray tube display of the input waveforms is provided by the vertical and horizontal amplifiers, intensity modulator circuit, and the CRT itself. The output of the preamplifier circuits is connected to the vertical amplifier which in turn drives the vertical deflection plates of the CRT. A dual-trace presentation is accomplished by switching between the two channels as in the chopped mode of a conventional oscilloscope. The slow ramp output is connected to the horizontal amplifier, which drives the horizontal deflection plates of the CRT. An intensity modulator circuit provides blanking of the trace between samples, an intensified zone at 0% and 100% points, and an intensified trace between start and stop points.

j. Fast Ramp. The fast ramp circuit is a linear ramp generator which is started by the input trigger signal and stopped when the fast ramp coincides with the slow ramp. The slope of the ramp is determined by the time range programmed. The output of the slow ramp/fast ramp comparator is designated the fast ramp clock (FRC).

k. Slow Ramp. The slow ramp circuit consists of three cascaded decimal counters and a digital-to-analog circuit. The 1-2-4-8 BCD output of the counters drives the D/A converter, which consists of transistor switches and precision weighting resistors. The currents due to the resistors are summed by an amplifier circuit. The output of the amplifier is a staircase with 1000 equal steps for a full sweep. The slow ramp counter is driven by a clock signal derived from the sampling pulse, or in the case of the real-time sweep ranges, from a crystal-controlled oscillator and dividers.

l. Control and Timing Circuits. The measurement cycle and measurement cycle rate are controlled by the timing circuits according to the operating mode. In waveform time measurement, the cycle is controlled by completion of all portions of the measurement program, consisting of 0% and 100% samples, and measurement period. Other portions of the measurement program are used in modes requiring external voltage reference or peak voltage reference. These will be discussed later.

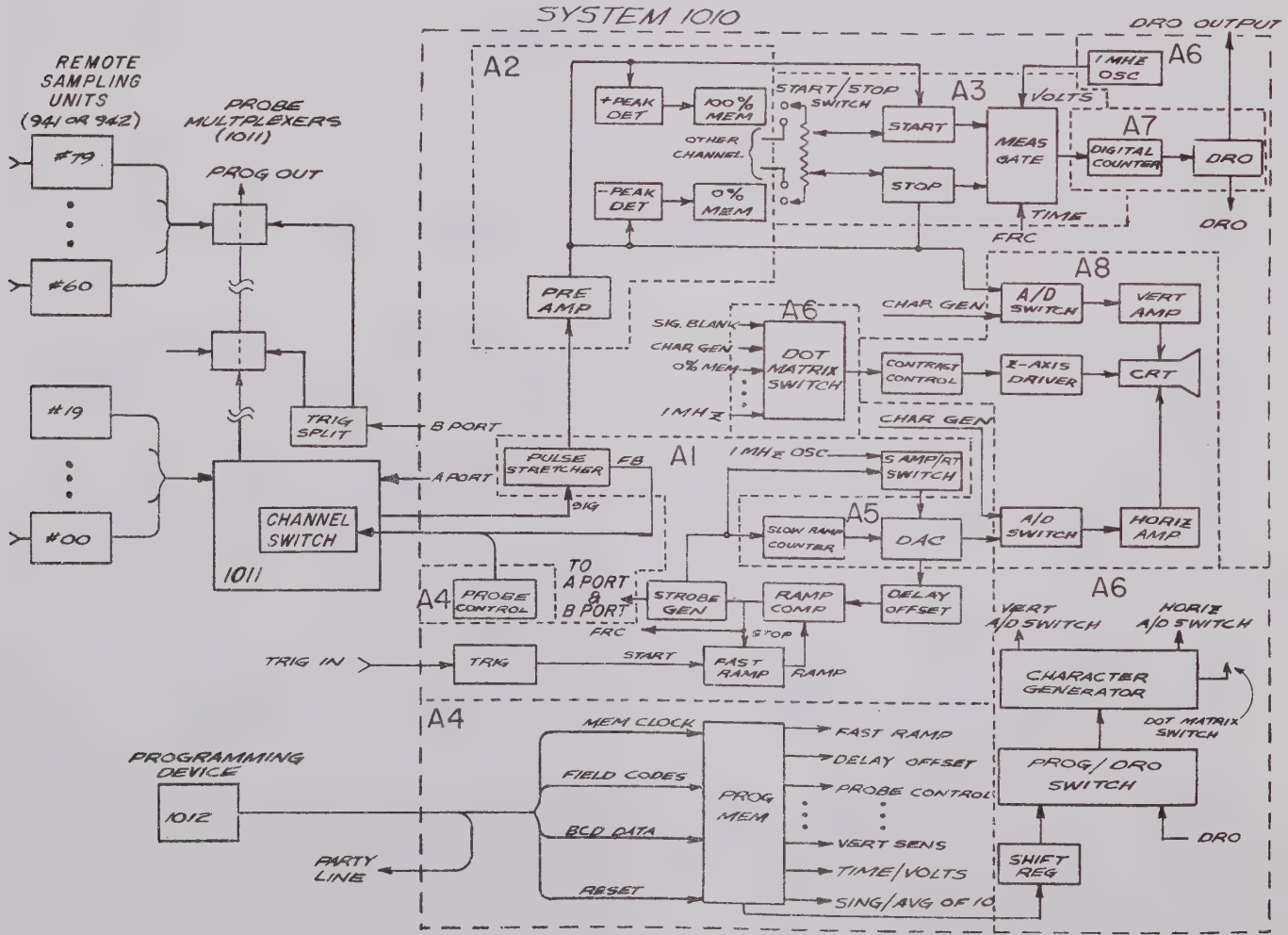

Figure 3-10 System 1010 Simplified Block Diagram

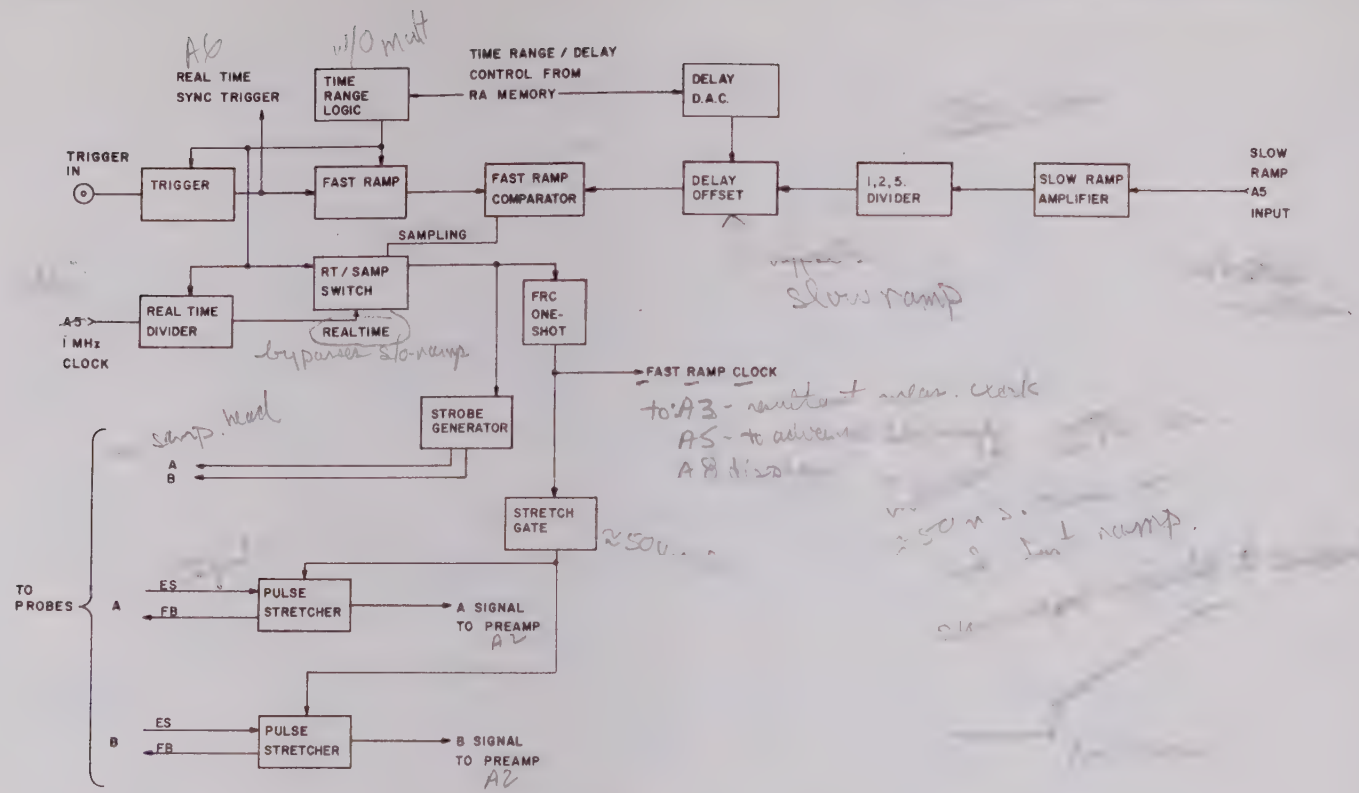

Figure 3-11 Sampler A1 Block Diagram

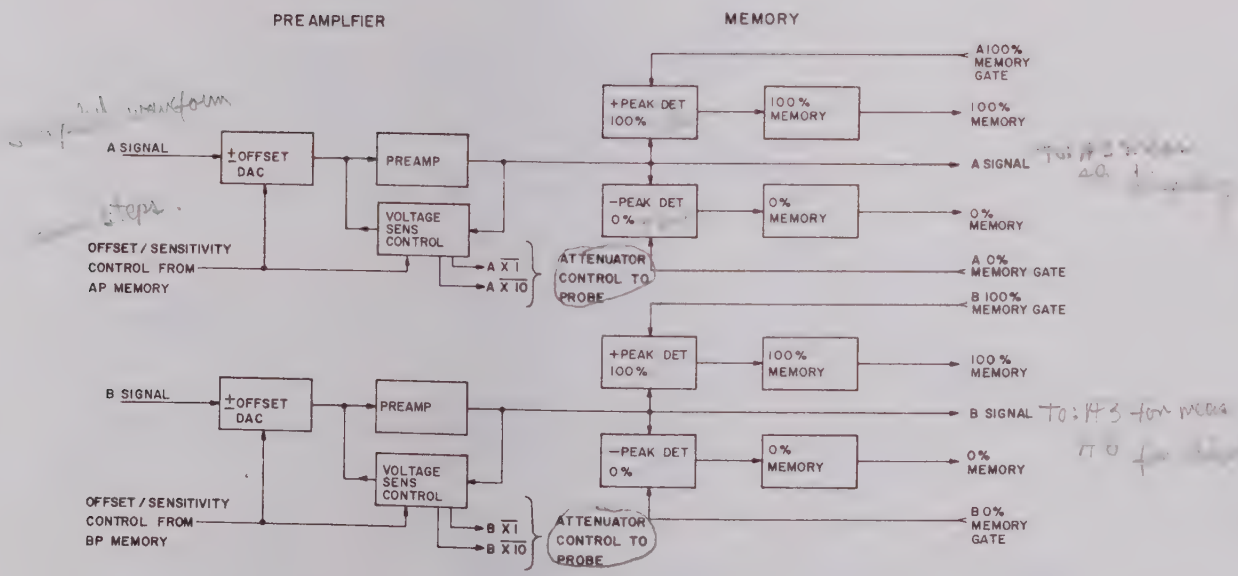

Figure 3-12 Preamp/Memory A2 Block Diagram

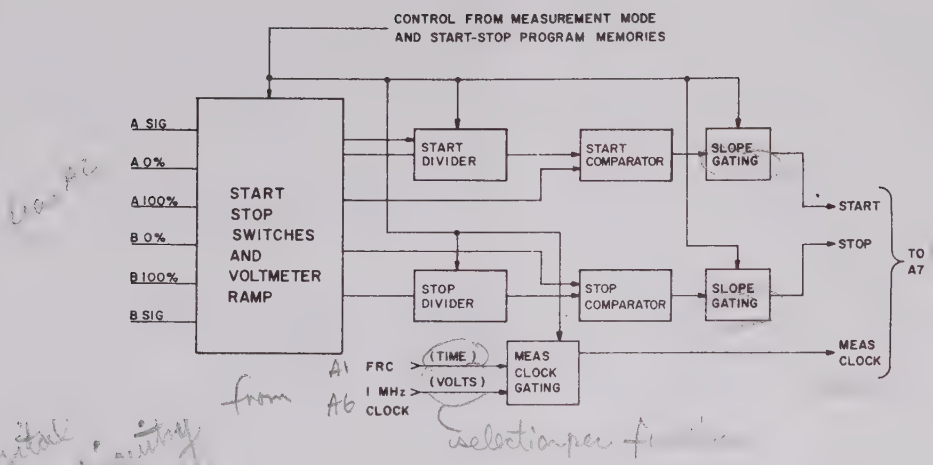

Figure 3-13 Start/Stop Logic A3 Block Diagram

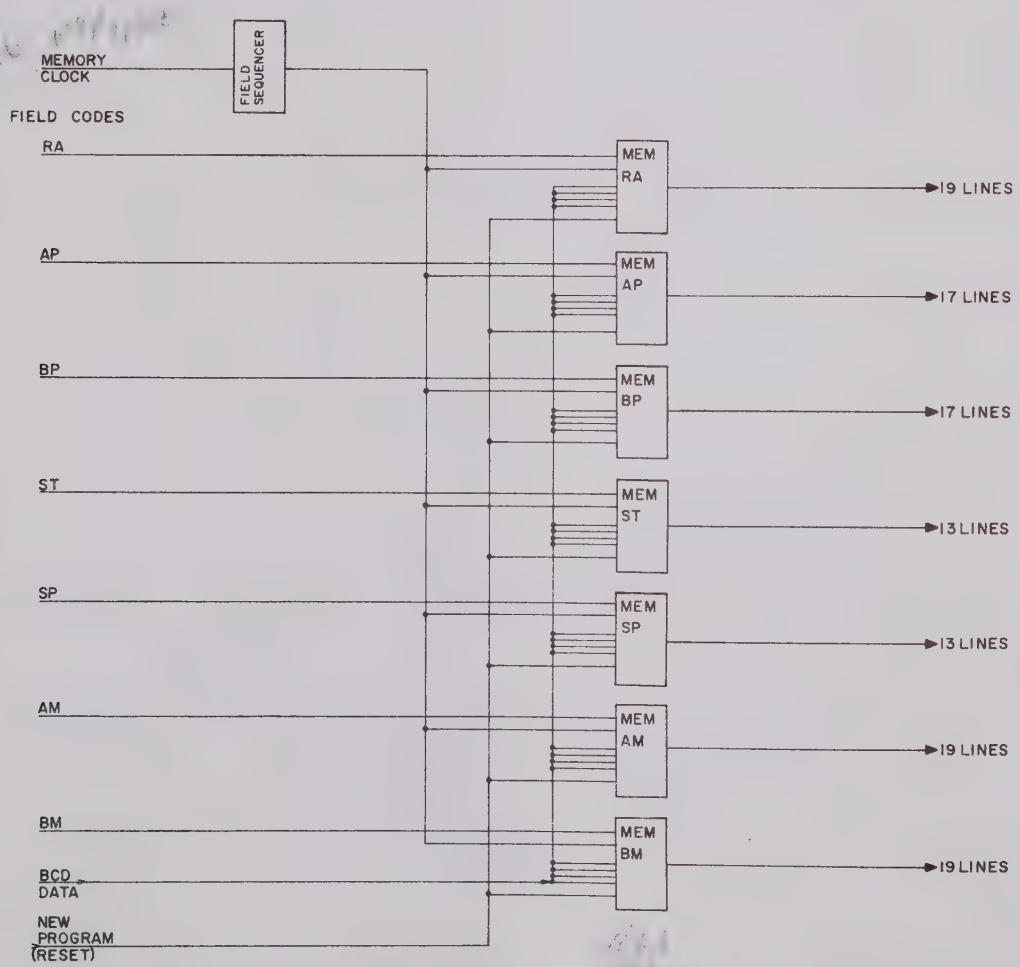

Figure 3-14 Program Memory A4 Block Diagram

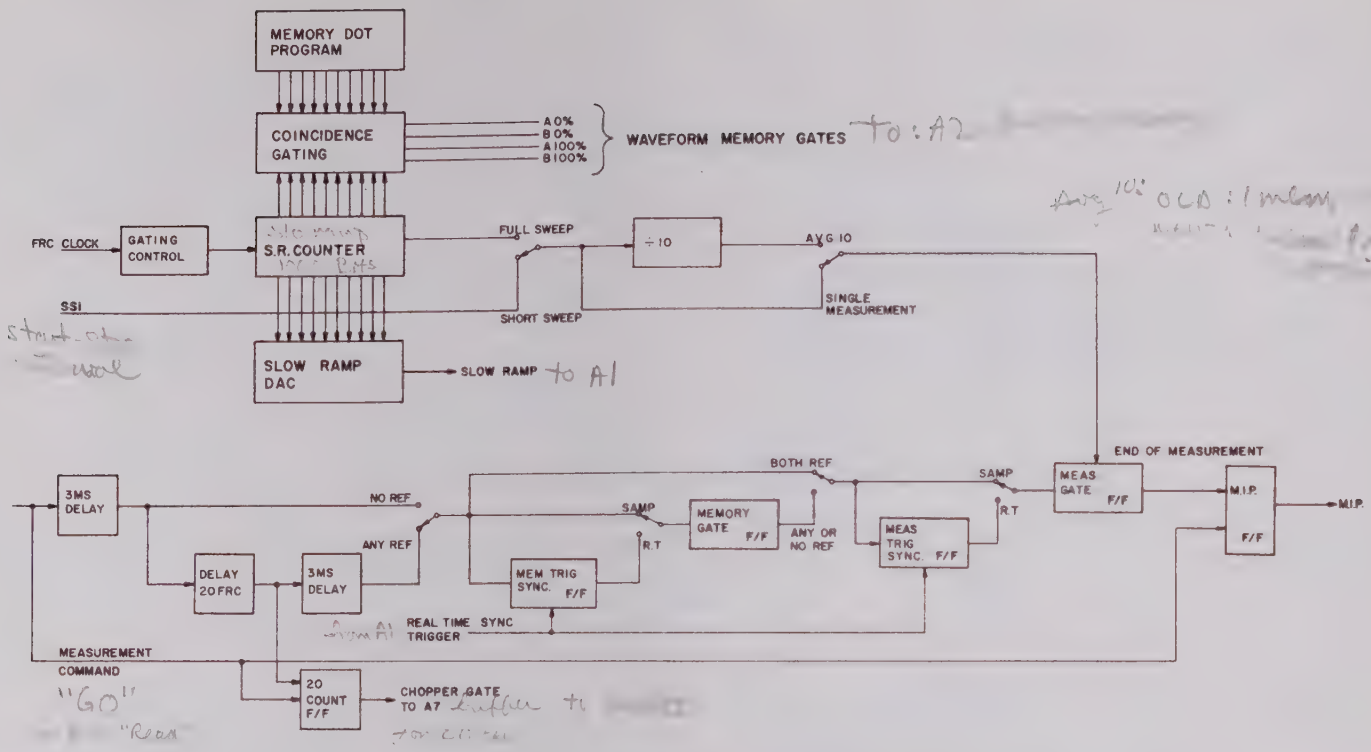

Figure 3-15 Control Logic A5 Block Diagram

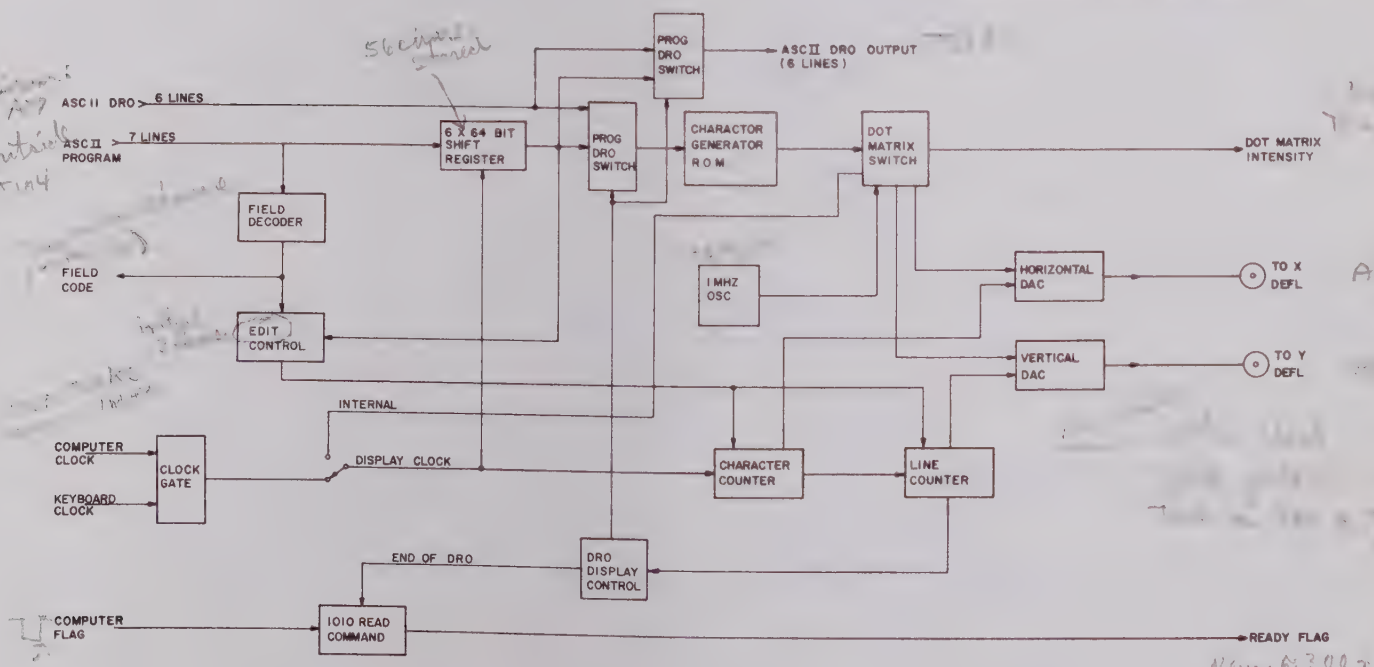

Figure 3-16 Display Logic A6 Block Diagram

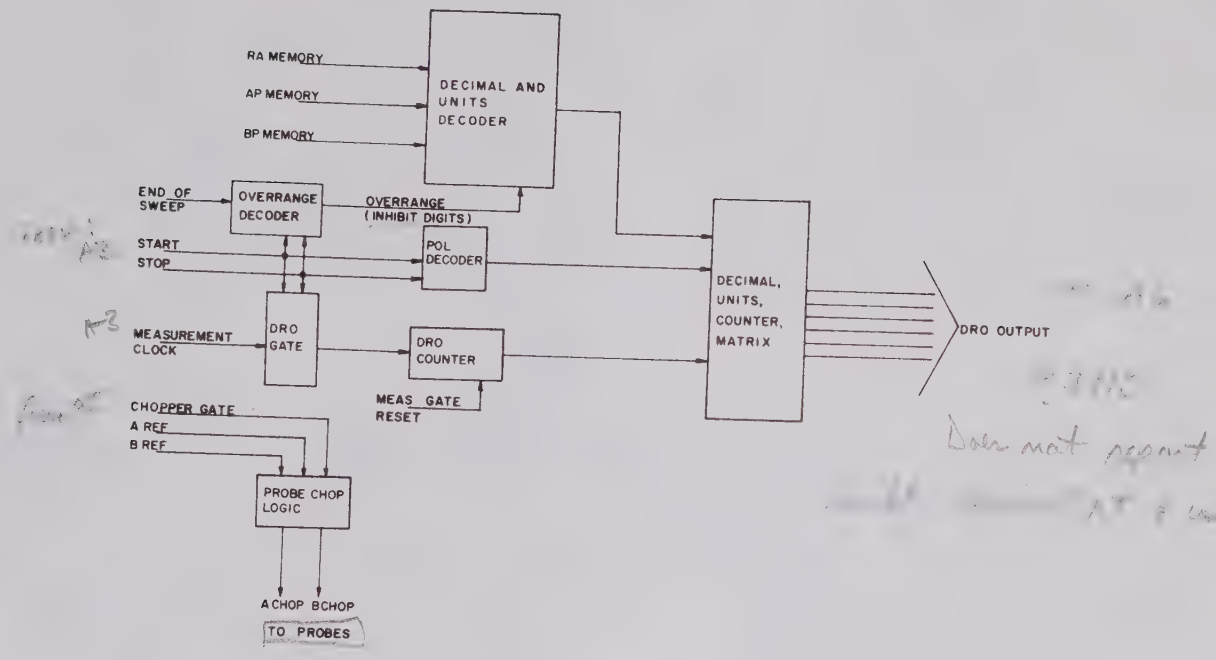

Figure 3-17 Counter and DRO Formatter A7 Block Diagram

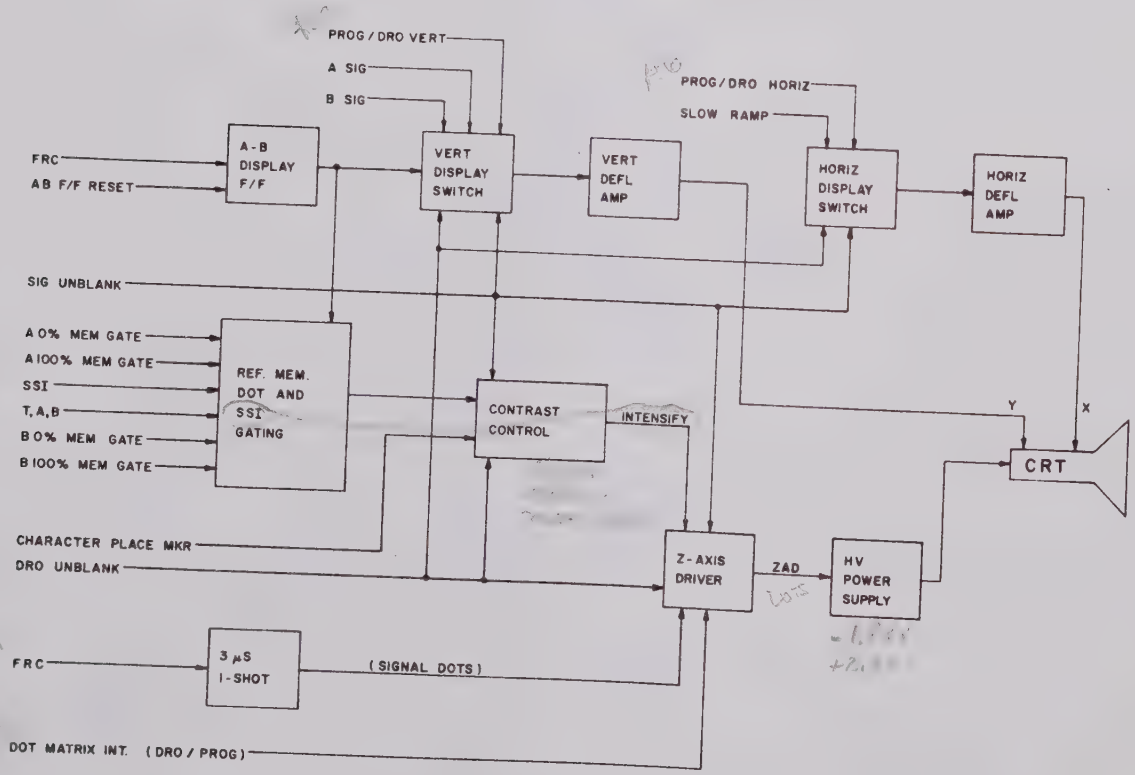

Figure 3-18 Vertical/Horizontal/High Voltage A8 Block Diagram

3-4 CIRCUIT DESCRIPTION – MODEL 1011

The Model 1011 Probe Multiplexer consists of a probe selector decoder which allows each multiplexer to accept and decode only those probe numbers which it controls. A multi-position switch on the front panel of the Multiplexer must be positioned to one of five positions (00 to 19, 20 to 39, etc.) prior to use. This allows the selector decoder to distinguish which number probes it controls.

Each Multiplexer has the capability of selecting both the A and B channel probe. Therefore, the selector decoder also decodes whether a particular numbered probe is to be connected to the A or B channel.

The Multiplexer must switch the following signals to the selected probe:

a. Strobe
b. Signal (ES)
c. Feedback (FB)
d. X1 Range Programming
e. X10 Range Programming
f. Chopper Programming

The switching of these signals and the functions of decoding and strobe regeneration are shown in Figure 3-19.

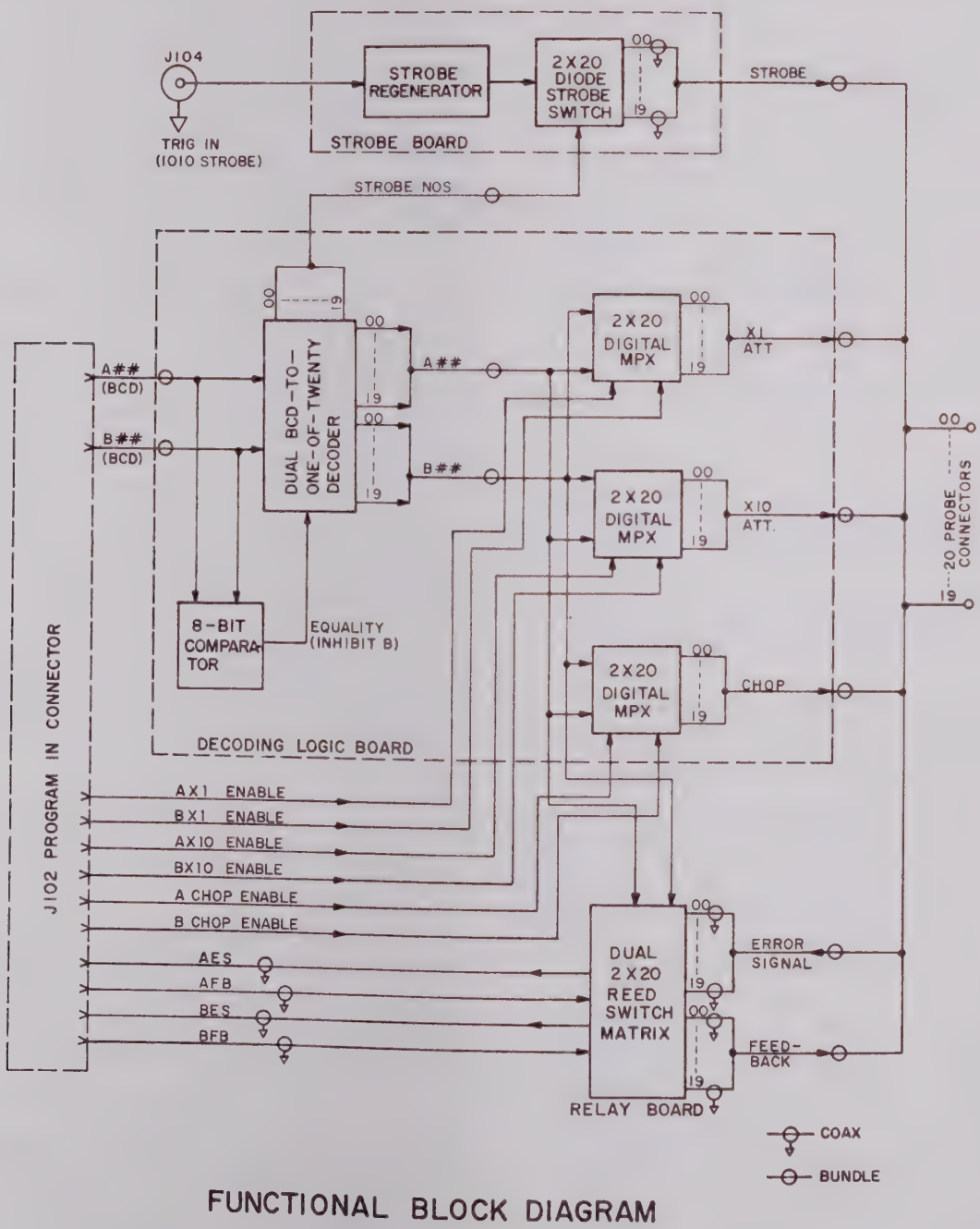

Figure 3-19 Model 1011 Probe Multiplexer Block Diagram

SECTION 4
MAINTENANCE

4-1 GENERAL INFORMATION

This section describes the complete performance verification and calibration procedures for the System 1010. The procedures listed should be used when normal maintenance of the instrument is performed, or when components have been replaced. All procedures within one section (i.e., power supply, memory, etc.), should be followed in the order given, since there is interaction between certain adjustments. For adjustments requiring an extender board, use AMC extender part number 401-41805. (Use special extender, part number 401-41893, for the vert/horiz high voltage board.)

4-2 PERFORMANCE VERIFICATION

a. **General.** The E-H System 1010 is an instrument designed for remote operation using a computer or other high speed data transfer device. The wide range of measurements that the 1010 is capable of making creates a problem when it must be functionally tested in the absence of the usual system controller. In these cases, a keyboard (E-H Model 1012) is often the only device available for programming the 1010's functions. This note describes a test procedure which results in nearly complete checkout of the logical functions of the 1010 under keyboard control. It can be completed in under thirty minutes by someone reasonably familiar with the 1010 and keyboard programming. Although intended for checking an instrument after calibration; it may be used before a calibration to help insure that the instrument is fully functional and thus not cause an interruption of a partially completed calibration. If this is done, some of the limits on DRO outputs may have to be relaxed but the functionability can still be confirmed.

b. Initial Mechanical Check

(1) Determine that all items comprising the complete shipment from the factory are present.

(2) Determine mechanical conformity to any special requirements of the purchase order.

(3) Observe the external condition of the packing carton and its contents for obvious shipping damage. Contact your receiving department in the event of physical damage.

c. Test Equipment Required

(1) Oscilloscope, 15 MHz bandwidth, dual-trace vertical plug-in units with signal addition capability.

(2) Time-mark Generator, Tektronix, Type 184.

(3) Calibration Fixture, Tektronix, 067-0508-00

(4) D.V.M. 0.1% accuracy, Fluke, Model 8100A.

(5) High Voltage Probe, Tektronix, P6013A.

(6) Triangular Waveform General (with Trigger out).

(7) Pulse Generator, E-H Model 139B, or equivalent.

(8) Programming Device, such as E-H Model 1012 Keyboard.

(9) BNC 50 ohm Termination.

(10) Two BNC Tees

(11) One BNC Male-to-BNC Male Adaption

d. Initial Setup

(1) Place the instrument on a bench top. Plug the ac power cable into a 117 V 60 Hz source (3 wire).

(2) Connect the remote sampling units to the input connectors designated J107 or J108 on the rear panel, or on the front panel of the Model 1011 Multiplexer.

(3) Connect A and B probes to the waveform generator output and trigger the 1010 by the Trigger Out. Properly terminate the waveform generator output at the probes.

Turn on the instrument by rotating the SCALE ILLUM. control clockwise out of the POWER OFF detent. Allow a 15-minute warm-up time. Although no warm-up time is required for instrument measurement functions, the cathode ray tube will require a short filament warm-up period.

e. Preliminary Control Settings

A POSITION	PRESET
B POSITION	PRESET
TRIGGER	AC, +
DC LEVEL	PRESET
STABILITY	PRESET
MEASUREMENT MODE	CONTINUOUS
INTENSITY	As Desired
FOCUS	Focus for Sharpest Trace
ASTIG	Adjust for Sharpest Trace
CONTRAST	As Desired

f. Electrical Checkout Procedure

(1) Program the System 1010 as follows:

```
RA1600T0
AP0011-0
BP0111-9
ST##XX#X          # = any number
SP##XX#X          X = any letter
AM##X##X
BM##X##X
```

(2) Time Base Test. By adjusting the triangular waveform generator, display one full cycle of the CRT display, (100 KHz). Set the peak-to-peak displayed signal to about 8 divisions.

Edit:
RA2500T0

Confirm that there are 2 cycles on the CRT display.

Edit:
RA5500T0

Confirm that there are 5 cycles on the CRT display.

Edit:
RA1500T0

Change the waveform generator to 10 KHz; confirm that there is one full cycle on the CRT display.

Edit:
RA1400T0

Change the waveform generator to 1 KHz; confirm that there is one full cycle on the CRT display.

Edit:
RA5300T0

Confirm that there are five full cycles on the CRT display.

Edit:
RA1300T0

Change the waveform generator to 100 Hz; confirm that there is one full cycle on the CRT display.

Edit:
RA2200T0

Confirm that there are two full cycles on the CRT display.

Edit:
RA5200T0

Confirm that there are five full cycles on the CRT display.

Edit:
RA1200T0

Change the waveform generator to 10 Hz; confirm that there is one full cycle on the CRT display

Edit:
RA2100T0

Confirm that there are two full cycles on the CRT display.

Edit:
RA5100T0

Confirm that there are five full cycles on the CRT display.

Edit:
RA1100T0

Confirm that there are ten full cycles on the CRT display.

Edit:
RA1700T0

Change the waveform generator to 1 MHz; confirm that there is one full cycle on the CRT display.

Edit:
RA1800T0

Change the waveform generator to 10 MHz; confirm that there is one full cycle on the CRT display.

Edit:
RA1900T0

Confirm that there is *about* 1/10 of a cycle on the CRT display.

(3) Time Delay Test.

Edit:
RA1800T0

Set the input signal so that some well determined reference point is on the last vertical graticule.

Edit:
RA1877T0

Confirm that the point that was on the last graticule is now approximately 2.3 divisions in from the first vertical graticule.

Edit:
RA188 (pause)

Confirm that the reference point is now approximately 1.3 divisions in from the first vertical graticule.

Continue editing RA:
8T0

Confirm that upon entering the 8, display moved approximately 0.1 division to the left.

(4) Measurement Mode Tests.

Edit:

```
RA1500T0
ST10%A1+
SP90%A1+
AM01P99P
```

Set the triangular waveform generator to 10 KHz; observe the DRO reading about 40 μseconds) and set the contrast such that the measured area is slightly intensified.

Edit:
RA1500T1

Confirm that the signal display goes beyond the intensified region only every other sweep and that the DRO is essentially unchanged. This checks the "Short Sweep" option.

Edit:
RA1500T0

Observe the approximate amount of time required to make a measurement (the repetition rate that the program is displayed) and the answer displayed on the DRO.

Edit:
RA1500T2

Confirm that the repetition rate decreased noticably and that the DRO answer was essentially unchanged from above.

(5) A and B Probes Gain Test.

Edit:
RA2600A0
BP0111-0

Connect the A and B Probes to the waveform generator output and set the amplitude to about four divisions peak-to-peak. Confirm that both probes are performing similarly.

Edit:
AP0051-0
BP0051-0

Confirm that the peak-to-peak amplitude is about eight divisions. Change the amplitude to three divisions.

Edit:
AP0021-0
BP0021-0

Confirm that the peak-to-peak amplitude is about 7.5 divisions. Change the amplitude to four divisions.

Edit:
AP0010-0
BP0010-0

Confirm that the peak-to-peak amplitude is about eight divisions. Change the amplitude to four divisions.

Edit:
AP0050-0
BP0050-0

Confirm that the peak-to-peak amplitude is about eight divisions. Change the amplitude to three divisions.

Edit:
AP0020-0
BP0020-0

Confirm that the peak-to-peak amplitude is about 7.5 divisions. Disconnect the input signal and ground the inputs of the probes through the 50Ω terminator. Set the A and B Vertical POSITION front panel adjustments to PRESET. Determine the vertical offset. It may be necessary to program less sensitive ranges to display the trace on the CRT. The offset should be less than 20 mV.

Edit:
AP0011-0
BP0011-0

Set the waveform generator amplitude to 10 divisions of deflection.

Edit:
AP0012-0
BP0012-0

Confirm that the peak-to-peak signal amplitude is about 1 division on both traces.

Set the waveform generator amplitude to 4 divisions of deflection.

Edit:
AP0023-0
BP0023-0

Confirm that the peak-to-peak signal amplitude is about 2 divisions on both traces.

(6) Offset Test.

Edit:
AP0011-0
BP0011-9

Confirm, or set by A Vertical POSITION, that the A trace is vertically centered.

Edit:
AP0011-1

Confirm that the trace is one division below the CRT center.

Edit:
AP0011-2

Confirm that the trace is two divisions below the CRT center.

Edit:
AP0011-4

Confirm that the trace is four divisions below the CRT center.

Edit:
AP0011-8

Confirm, by pressing BEAM FINDER, that the trace is below the bottom of the normal display field.

Edit:
AP0011+1

Confirm that the trace is one division above the CRT center.

Edit:
AP0011+2

Confirm that the trace is two divisions above the CRT center.

Edit:
AP0011+4

Confirm that the trace is four divisions above the CRT center.

Edit:
AP0011+8

Confirm, by using the BEAM FINDER, that the trace is above the normal display area.

Edit:
AP0011-9
BP0011-0

Adjust the B trace to the vertical center of the CRT. Repeat all parts of step (6) substituting BP for AP.

(7) Start and Stop Controls Test Program:

```
RA1700T0
AP0011-0
BP0011-0          # = any number
ST##XX#X          X = any letter
SP##XX#X
AM01P99P
BM01P99P
```

Reconnect the triangular waveform generator and create a CRT display where two full cycles cover ten divisions horizontally. (See figure 4-1).

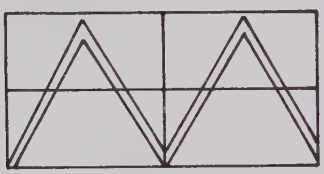

Figure 4-1 Start/Stop Test Display

For all tests in step (7) confirm that *both* traces are intensified over the period of measurement.

Edit:
ST77%A1+
ST77%B1+

Confirm DRO reads 0 ±10nsec.

Edit:
ST88%B1-
SP88%A1-

Confirm DRO reads 0 ±10nsec.

Edit:
ST10+B1+
SP10+A1+

Confirm DRO reads 0 ±10nsec.

Edit:
ST10-A1-
SP10-B1-   # = any number
AM25G##X   X = any letter
BM25G##X

Confirm DRO reads 0 ±15nsec.

Edit:
ST50%A1+
SP50%B1+
AM01P99P
BM01P99P

Observe that the DRO reads near 0.

Edit:
SP50%B1-

Confirm that the DRO reads about 250nsec.

Edit:
SP50%B2+

Confirm that the DRO reads about 500nsec.

Edit:
ST50%B1+
SP50%A2+

Confirm that the DRO reads about 500nsec.

Edit:
ST50%B2+

Confirm that the DRO reads about 0nsec.

Edit:
ST50%B2-

Confirm that the DRO reads about -250nsec.

Edit:
ST50%A2-
SO50%B2+

Confirm that the DRO reads about -250nsec.

Edit:
ST50%A2+

Confirm that the DRO reads near 0.

(8) A Memory Test. Remove the signal from both probes and ground their inputs through 50Ω. Perform the following for A probe then repeat, in step (9), programming the B memory instead.

Edit:
RA1700A0
BP0111-9

Now we are prepared to check the A channel.

Edit:
AM77G88G

Confirm intensified dots at 7.7 divisions and 8.8 divisions horizontally.

Edit:
AM77G89G

Confirm that the dot at 8.8 divisions moved about 0.1 division to the right.

Edit:
AM88G77G

Confirm that there are intensified dots at 7.7 divisions and 8.8 divisions.

Edit:
AM89G77G

Confirm that the dot at 8.8 divisions moved about 0.1 division to the right.

Edit:
AM01R99G

Listen to confirm the reference relay in A probe is being switched. Read DRO and confirm that it is 0 volts ± 40mV.

Edit:
AM01G99G

Read DRO and confirm that it is 0 volts ± 4mV.

Edit:
RA1700B0
AP0011-9
BP0111-0

(9) B–Memory Test. Return to (8) and perform the same tests, substituting BM for AM in all program editing.

4-3 CALIBRATION PROCEDURE

a. Low Voltage Supply (A9)

Using a DVM, measure the +20 V supply output across C31 on A2. Adjust A9 R11 for +20V ±50 mV.

b. Preamp offset: (A2)

(1) Raise A2 on extender and disconnect J1 and J3.

(2) Short J1 and J3 to ground using Micon connectors with center conductor tied to shield. (Keep ground path as short as possible.)

(3) Load Program:

RA1700T0
AP0020-0
BP0120-0
ST##XX#X
SP##XX#X
AM01P99P
BM01P99P

# = any number
X = any letter

(4) Set A and B POSITION controls on front panel to PRESET, set STAB. fully CW, and MEAS. MODE to REMOTE.

(5) Adjust A position to zero by adjusting R5 (on A2) to set the A preamp output to 0V ±50mV. Use an oscilloscope measuring at J5, or on the right side on R38.

(6) Adjust B position to Zero, adjusting R43 to set the preamp output to 0V ±50mV with an oscilloscope measuring at J7, or on the right side of R76.

(7) Edit:
AP0020+0
BP0120+0

(8) Measure output of A preamp at J5 on the right side of R38 and B preamp output at J7 on the right of R78. Both outputs should be 0V ±500mV. If A preamp is more than ±500mV, remove trim resistor for R23 and go to Step (9). If B preamp is more than ±50mV, remove trim resistor for R61 and go to Step (10). If both A and B preamp are 0V ±50mV, advance to subsection 4-3c, Memory Offset.

(9) Select trim resistor for R23 to set A-channel preamp output to 0V ±500mV. This normally needs to be done only upon initial checkout of the 1010. It may be done one of two ways:

(a) Edit Program
AP0020+0
Using a resistor substitution box across R23, adjust for A channel PreAmp output (J5) to within 500mV of 0 volts.

(b) If no resistor substitution box is available:
Edit Program
AP0010+0
Measure A preamp output (J5) and calculate the value of the trim resistor by the following equation:

$$R\ trim\ (K\Omega) = \frac{1.82 \times 10^5}{\text{PreAmp Output in mV}}$$

(10) Select trim resistor for R61 to set B channel preamp output to 0V ±500mV. This normally needs to be done only upon initial checkout of the 1010. It is done similarly to the A channel and may be done one of two ways:

(a) Edit Program
BP0020+0
Using a resistor substitution box across R61, adjust for B channel PreAmp output (J7) to within 500mV of 0 volts.

(b) Edit Program
BP0010+1
Measure B PreAmp output (J7) and calculate the value of the trim resistor by the following equation:

$$R\ trim\ (K\Omega) = \frac{1.82 \times 10^5}{\text{PreAmp Output in mV}}$$

c. Memory Offset: (A2)

(1) Edit Program:
AP0011-0
BP0111-0

(2) Set preamp output A and B to 0V ±5 mV using front panel A and B position controls. Set MEASUREMENT MODE switch to CONTINUOUS.

(3) Using a dual trace oscilloscope monitor proper preamp output with one channel while making the following adjustment.

NOTE

Preamp output must be kept to 0V ±5 mV while adjusting memories. See Figure 4-2 for portion of trace to make measurement.

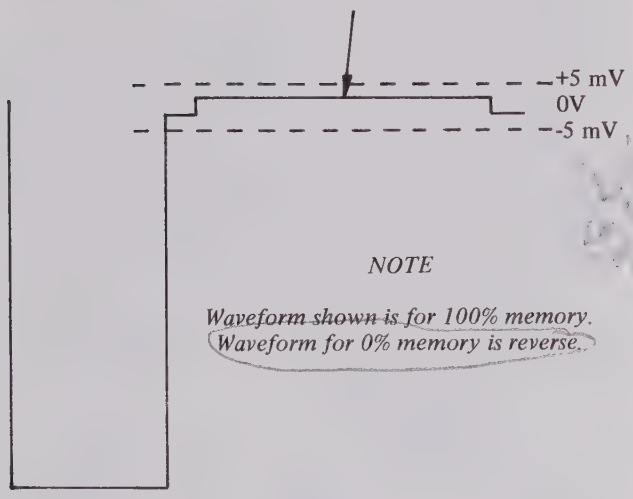

Figure 4-2 Memory Offset Preamp Output

(4) Using an oscilloscope on the left side of R95 (output of A 100% memory) adjust R86 for 0V ±5 mV (same as a preamp output).

(5) Using an oscilloscope on the left side of R113 (output of A 0% memory) adjust R104 for 0V ±5 mV (same as a preamp output).

(6) Using an oscilloscope on the left side of R132 (output of B 100% memory) adjust R123 for 0V ±5 mV (same as output of B preamp).

(7) Using an oscilloscope on the left side of R149 (output of B 0% memory) adjust R140 for 0V ±mV (same as output of B preamp).

(8) Edit program RA1700A0. Note DRO readout; reading should be less than ±5 mV. If not, repeat steps (4) and (5). (If a second try does not give correct output, comparators in A3 may need adjustment. Perform subsection d., then repeat subsection c.)

(9) Edit Program RA1700B0. Note DRO readout; reading should be less than ±5 mV. If not, repeat steps (6) and (7). (If a second try does not give correct output, comparators in A3 may need adjustment. Perform subsection d., then repeat subsection c.)

(10) Remove the jumpers of J1 and J3, reconnect cables, and replace A2 in its socket.

d. Zero Comparators: (A3)

(1) Raise A3 on extender board.

(2) Remove K38, K40, K42, K44 and short the bottom center pins of K38 and K42 to ground.

(3) Remove J1 and J2 and short them to ground using Micon connectors with center conductor tied to shield.

(4) Load Program

RA1700T0
AP0011-0
BP0111-0
ST00%A1+
SP00%A1+
AM10P90P
BM10P90P

(5) Connect an oscilloscope probe to IC7 pin 8, and adjust R103 until IC7 changes levels at random.

(6) Connect an oscilloscope probe to IC5 pin 6, and adjust R128 until IC5 changes levels at random.

e. Start/Stop Current Source (A3)

(1) Leave the comparator inputs connected as in Subsection 4-3 d. (4) above.

(2) Connect a 0.1% DVM with greater than 20 megohms input impedance to the input of the start comparator the right side (Q45 side) of R94.

(3) Program ST99-A1–

(4) Adjust R93 for -4.950V ±10 mV.

(5) Check other current levels as follows:

ST75-A1–	-3.75V ±25 mV
ST50-A1–	-2.50V ±25 mV
ST25-A1–	-1.25V ±25 mV

(6) Program ST99+A1-

(7) Adjust R84 for +4.950 ±10mV

(8) Check other current levels as follows:

ST75+A1-	+3.75V ±25 mV
ST50+A1-	+2.50V ±25 mV
ST25+A1-	+1.25V ±25 mV

(9) Connect the DVM to the input of the stop comparator, the right side (Q52 side) of R119.

(10) Program SP99-A1–

(11) Adjust R118 for -4.950V ±10mV

(12) Check other current levels as follows:

SP75-A1-	-3.75 ±25mV
SP50-A1-	-2.50 ±25mV
SP25-A1–	-1.25V ± 25mV

(13) Program SP99+A1-

(14) Adjust R109 for +4.95V ±10mV

(15) Check other current levels as follows:

SP75+A1-	+3.75V ±25mV
SP50+A1-	+2.50V ±25mV
SP25+A1-	+1.25V ±25mV

(16) Remove shorts from center pins of K38 and K42. Reinstall K38, K40, K42, K44.

f. Voltmeter Calibration (A3)

(1) Using an amplitude calibrated pulse generator, set it to 600 mV and connect it to the A probe. Program the system 1010 to read:

RA1#50A0
AP0011-3
BP0111-3
ST00%A1-
SP00%A1-
AM10G90G
BM10G90G

(2) Adjust R71 for 600mV ±3 mV reading on the System 1010 digital readout.

(3) Disconnect A probe from the pulse generator, connect B probe and Edit Program RA1#50B0.

(4) Check for a 600mV ±mV readout

(5) Adjust R78 for a voltage overrange when the display goes above or below the CRT Display area.

(6) Repeat (1) to (4) after making any adjustment of R78.

(7) Reconnect J1 and J2 of A3 and return it to the card cage.

g. Sampler (A1)

(1) Raise A1 on the extender card.

(2) Program the System 1010 to read:

RA1700T0
AP00##X#
BP01##X# # =
ST50%A1+ X =
SP50%A2+
AM01P99P
BM01P99P

} As required for good display.

(3) For A1 fitted with R195, and with an oscilloscope monitoring collector of Q31, adjust R195 for base line of slow ramp to 0V ±100mV.

(4) Connect the System 1010 probe A to a time mark generator. Edit Program RA5950T2.

(5) Set the generator to 2ns. Use the 2ns output for the probe, use the 50ns output (not the trigger output) to trigger the System 1010.

(6) Adjust R76 for +02.00ns ±.05ns reading on the System 1010 digital readout (DRO).

(7) Edit program RA1950T2 and read +02.00ns ±.1ns. Set the generator to 5ns. The readout should be +05.00ns ±.1ns.

(8) Connect A probe to marker output, and the System 1010 "Trig Input" to generator "Trig Out".

(9) Program RA2850T2, set generator to 10ns, trigger to 1µs. Adjust R83 for a readout of +10.00ns ±.2ns.

(10) Program RA5850T2; the readout should be +010.0ns ±.5ns. Set the generator to 20ns and readjust R83 if necessary to read +020.0ns ±.5ns. Program RA1850T2 and the readout should be +020.0ns ±1ns. Set the generator to 50ns and the readout should be +050.0ns ±1ns.

(11) Program RA2750T2 and set the generator to 0.1µs. Adjust R84 to read +100.0ns ±2ns. Program RA5750T2 the readout should be +0100.ms ±5ns. Readjust R84 if necessary. Program RA1750T2 and set the generator to .5µs. The readout should be +050.ns ±10ns.

(12) Program RA2650T0 and set the generator for 1µs, trigger to 10µs. Adjust R85 to read +1.000µ ±.02µs. Program RA5650T0 to read +01.00µ ±.05µs. Readjust R85 if necessary. Program RA1650T0 and set the generator to 5µs. The readout should be +05.00µs ±1µs.

(13) Program RA2550T0, set the generator to 10µs, trigger to .1ms. Adjust R86 to read +10.00µs ±2µs. Program RA5550T0 and readjust R86 if necessary to read +010.0µs ±.5µs. Program RA1550T0 and set generator to 50µs. The readout should be +050.0µs ±1.0µ.

(14) Program RA2450T0, set generator to 0.1ms, trigger to 1ms. Adjust R87 to read 3100.0µ ±2.0µs. Program RA5450T0. Readjust R87 is necessary to read +0100.µs ±5.0µs,. Program RA1450T0, set generator to 0.5ms. The readout should be +0500.µs ±10.µs.

(15) Program RA5300T0, set the generator to 1.0ms, trigger to 10ms. The readout should be +01.00ms ±0.05ms. Program RA1300T0, and set the generator to 5ms. The Readout should be +05.00ms ±0.5ms.

(16) Program RA2200T0, and set generator to 10ms, trigger to .1 second. The readout should be +10.00ms ±0.2ms. Program RA5200T0, the readout should be +010.0ms ±0.5ms. Program RA1200T0, set the generator to 50ms. The readout should be +050.0ms ±1ms.

(17) Program RA2100T0 and set the generator to 0.1 second, trigger to 1ns. The readout should be +100.0ms ±2ms. Program RA5100T0, the readout should be +0100.ms ±5ms. Program RA1100T0, set the generator to .5 sec., the readout should be +0500.ms ±10.0ms.

h. Delay: (A1)

(1) Use a pulse generator with less than 10ns rise and fall time. Set generator output for a positive pulse with 2.00µs ±.02µs pulse width and approximately 500mV in amplitude. (You may use the System 1010 under test to make this set up).

(2) Connect the A probe and the System 1010 trigger input to the pulse generator output. The probe input and trigger input must be connected such that there is less than

5ns of delay between them. Set the TRIGGER POLARITY to AC+ and TRIGGER STAB to PRESET.

(3) Program:

```
RA2500T0
AP0011-0
BP0111-2
ST##XX#X        # = any number
SP##XX#X        X = Any letter
AM##X##X
BM##X##X
```

(4) Adjust 0-delay, R124, until the trailing edge of the first pulse is just off the left side of display. This sets 2μs of delay from trigger to display, which is 2% of RA15##X# range. All other ranges should now be 2% + approximately 40ns. If other ranges are checked in this method the 40ns must be considered on the faster ranges.

(5) The adjustment of A and B channel loop gains, R167 and R185 will be covered in the probe calibration procedure in Subsection 4-4.

i. Display Logic (A6)

(1) Raise A6 on the extender card.

(2) Adjust R101 for equal horizontal spacing between characters.

(3) Adjust R110 and R111 for equal spacing between lines.

(4) Replace A6 in its socket.

j. Vertical/Horizontal/High Voltage (A8)

CAUTION

Do Not Place A8 on Standard Extender Board.
Arcing of the High Voltage Supply may occur.
Use modified Extender Board, E-H Part Number 401-41893.
Do not remove the A8 board from its socket for at least two minutes after power is turned off.

(1) Connect a high voltage probe to connector 1, pin 14 of A8. Adjust R24 for -1700VDC.

(2) Program:

```
RA1700T0
AP0011-#
BP0111-0        X = Any number of letter
STXXXXXX        may be used.
SPXXXXXX        # = Offset as
AM10P90P        required for good display.
BM10P90P
```

(3) Adjust R13, Horizontal Gain, until the memory dots are on the 1st and 9th line of the graticule.

(4) Using an amplitude calibrated pulse generator, set it to 600mV and connect the output to the A probe. Adjust R6 for a signal deflection of 6 divisions.

(5) DRO/Program Display adjust.

(a) Adjust R19, Horizontal Center, until the DRO readout is 1/8" from the left edge of the DRO/program lines on the graticule.

(b) Adjust R70, DRO Horizontal Gain, until the DRO/program readout is 1/8" from the right edge of the graticule lines.

(c) Adjust R47, DRO Vertical Position, until DRO/program readout is 1/8" from the bottom of the graticule lines.

(d) Adjust R51, DRO Vertical Gain, until the DRO/program is 1/8" from the top of the graticule lines.

(6) With the INTENSITY potentiometer on the front panel turned to full brightness, adjust R60 until the DRO program display just goes out of focus.

(7) After waiting at least two minutes after the power is turned off, return the A8 board to its socket.

4-4 REMOTE SAMPLING UNIT (PROBE) CALIBRATION

a. Calibrate Type 941 Probe

NOTE

The procedure given is described for A probe. The B probe calibration is the same other than where noted.

(1) Set all three potentiometers on the probe to the center of their range. On the System 1010 front panel, set A and B Vertical Position pots to PRESET. Inside the 1010, center R167 and R185 on the A1 Sampler Board.

(2) Program the System 1010 as follows:

```
RA1700X0
AP0011-0
BP0011-0
ST##XX#X        # = any number
SP##XX#X        X = any letter
AM##G##G
BM##G##G
```

(3) Connect the pulse generator to the probe and make the following settings:

Amplitude ..... Approximately +30 mV
Width ..... Approximately 300 nsec
Repetition Rate ..... Greater than 100 KHz
Trigger Delay ..... As required to observe the full pulse.

(4) Bias and Balance Adjust (R13, R12). Adjust R13 to determine the range of operation within which the displayed pulse is undistorted. (Note: It may be necessary to adjust R12 concurrently to keep the display on the screen).

(5) Set R13 to the midpoint of the range found in step 4.

(6) Remove the pulse from the probe and set R12 so that the trace is centered on the CRT. Keep the probe input grounded through less than 100 ohms.

(7) Loop Gain Program:

RA2500T0
AP0011-0
BP0011-0

(8) Connect the pulse generator to the probe and make the following settings:

Amplitude ..... Aproximately 500 mV
Width .....Approximately 5μsec
Repetition Rate .....Approximately 60 KHz
Trigger Delay .....As required to observe the full pulse.

(9) Adjust R10 on the probe and R167 on the A1 Board (R185 for Channel B) on the 1010 so that the first sample is at the 50% point of the waveform.

NOTE

If the samples are jumping up and down the leading edge of this waveform, the first sample is being taken at the leading edge of the pulse. A slight adjustment of the generator repetition rate or trigger delay will stabilize the first sample.

(10) Program:

RA1700T0

(11) Adjust trigger delay on the pulse generator to get a display like that shown in Figure4-3a.

(12) Increase loop gain adjustments (step 9) to just eliminate the unwanted step (if present) as shown in Figure 4-3b.

(13) Offset Balance Program:

RA1700T0
AP0020-0
BP0020-0

(14) Remove the inputs to the probes and connect the 50 ohm termination to inputs.

(15) Adjust R12 to center the trace on the CRT.

(16) This completes the 941 Probe Calibration Procedure.

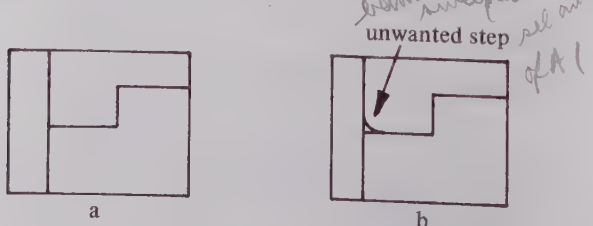

Figure 4-3 Loop Gain Adjustment Displays

b. Calibrate Type 942 Probe

NOTE 1: When Calibrating probes with a Model 1011 Multiplexer a slight deviation in this procedure is required:

1. Calibrate the first probe on A-Channel.

2. Re-program the same probe on B-Channel.

3. Perform steps (23) through (28) (Loop Gain) except do *not* adjust R73 on probe, instead set R195 on the A1 board for the same results as on A Channel. This will match the loop gain controls on A1. All other probes which are calibrated should be done as in the procedure except do not adjust R167 or R185 on A1. Make all this loop gain adjustments on the probes. If you have a probe which doesn't have enough range on its loop gain adjust, then you will have to change loop gain on A1 in *both* A and B Channels. This will require you to re-calibrate loop gain on *all* probes.

NOTE 2: The procedure given is described for A probe. The B probe calibration is the same other than where noted.

(1) On the System 1010 front panel, set A and B Vertical Position pots to PRESET. Inside the 1010, raise the A1 Board on an extender card, and center R167 and R185. On probes which are basically functioning go to step 2. On probes which have had parts changed, set all seven potentiometers on the probe to the center of their range.

(2) Program the System 1010 as follows:

RA1700X0
AP0011-0
BP0011-0 # = any number
ST##XX#X X = any letter
SP##XX#X
AM##G##G
BM##G##G

(3) Connect the pulse generator to the probe and make the following settings:

Amplitude: Approximately +300 mV
Width: Approximately 300 nsec
Repetition Rate: Greater than 100 KHz.
Trigger Delay: As required to observe the full pulse.

(4) X1 range adjust (R47, R45) adjust R47 to determine the range of operation within which the displayed pulse is undistorted. (Note: It may be necessary to adjust R45 concurrently to keep the display on the screen).

(5) Set R47 to the midpoint of the range found in step 4.

(6) Remove the pulse from the probe and set R45 so that the trace is centered on the CRT. Be sure the probe input is grounded through less than 100 ohms.

(7) X10 Range Adjust (R38, R40 and C7) Program:

AP0012-0
BP0012-0

(8) Connect the pulse generator to the probe and make the following settings:

Amplitude .....Approximately 3V
Width .....Approximately 300 nsec
Repetition Rate .....Greater than 100 KHz
Delay .....As required to observe the full pulse

(B)

(9) Adjust R40 to determine the range of operation within which the displayed pulse is undistorted. (Note: It may be necessary to adjust R38 concurrently to keep the display on the screen).

(10) Set R40 to the midpoint of the range found in step 9. .

(11) Remove the pulse from the probe and set R38 so that the trace is centered on the CRT.

(12) Edit:

RA1600T0

(13) Reconnect the pulse generator. Set pulse generator width to approximately 3 μsec and the trigger delay as required to display the leading edge of the pulse.

(14) Adjust C7 for minimum overshoot and flat top on the pulse.

(15) X100 Range Adjust (R31, R33 and C1) Program:

RA1700T0
AP0053-0
BP0053-0

(16) Connect the pulse generator to the probe and make the following settings:

Amplitude.....10 to 30 volts
Width.....Approximately 300 nsec
Repetition Rate.....Greater than 100 KHz
Delay.....As required to observe the full pulse

(17) Adjust R33 to determine the range of operation within which the displayed pulse is undistorted. (Note: It may be necessary to adjust R31 concurrently to keep the display on the screen).

(18) Set R33 to the midpoint of the range found in step 17.

(19) Remove the pulse from the probe and set R31 so that the trace is centered on the CRT.

(20) Edit:

RA1600T0

(21) Reconnect the pulse generator and set its width to approximately 3 μsec and trigger delay as required to display the leading edge of the pulse.

(22) Adjust C1 for minimum overshoot and a flat top on the pulse.

(23) Loop Gain Program:

RA2500T0
AP0011-0
BP0011-0

(24) Connect the pulse generator to the probe and make the following settings:

Amplitude..... Approximately 500 mV
Width.....Approximately 5 μsec
Repetition Rate.....Approximately 60 KHz
Delay.....As required to observe the full pulse

(25) Adjust R73 on the probe and R167 on the A1 Board (R185 for Channel B) on the 1010 so that the first sample is at the 50% point of the waveform.

NOTE:

If the samples are jumping up and down the leading edge of this waveform, the first sample is being taken at the leading edge of the pulse. A slight adjustment of the generator repetition rate or trigger delay will stablize the first sample.

(26) Program

RA1700T0

(27) Adjust trigger delay on the pulse generator to get a display like that shown in Figure 4-3a, that is the trailing edge of the pulse is beyond the display.

(28) Increase loop gain adjustments (step 25) to just eliminate the unwanted step (if present) as shown in Figure 4-3b.

(29) Offset Balance Program:

RA1700T0
AP0020-0
BP0020-0

(30) Remove the inputs to the probes and connect a 50 ohm termination to inputs.

(31) Adjust R45 to center trace on the CRT.

(32) Program:

AP0022-0
BP0022-0

(33) Adjust R38 to center the trace on the CRT.

(34) Program:

AP0023-0
BP0023-0

(35) Adjust R31 to center the trace on the CRT.

(36) This completes the 942 Probe Calibration Procedure.

4-5 PERFORMANCE VERIFICATION, MODEL 1011

a. **General.** This procedure determines operating characteristics of the Model 1011. It should be performed at initial incoming inspection and at periodic calibration intervals thereafter.

b. **Initial Mechanical Check.**

(1) Determine that all items comprising the complete shipment from the factory are present.

(2) Determine mechanical conformity to any special requirements of the purchase order.

(3) Observe the external condition of the packing carton and its contents for obvious shipping damage. Contact your receiving department in the event of physical damage.

c. Test Equipment Required.

(1) Oscilloscope, sampling type E-H 1100 or equivalent.

(2) DVM, 0.1% accuracy, Fluke, Model 8100A.

(3) Signal Pulse Generator, Square Wave and Triangle or Sine Waveform, (with Trigger Out).

(4) System 1010 Waveform Analyzer.

d. Initial Setup.

(1) Connect a cable between J106 MULTIPLEXER on the System 1010 and J102 PROG. IN on the Model 1011. Connect two Type 941 or two Type 942 Remote Sampling Units to the front panel connectors 00 and 01 on the Model 1011. Connect the output of the signal generator to both sampling units using a tee adaptor. If possible, make the cabling to one sampling unit about 6 feet longer than the cable to the other unit, to give some relative delay between signals.

(2) Connect the trigger output of the signal generator to the System 1010 Trigger Input jack J104, and set the front panel TRIGGER POLARITY switch to the proper polarity for the trigger output. Connect A PROBE connector J107 on the System 1010 to J104 TRIG INPUT connector on the Model 1011.

e. Preliminary Control Settings.

(1) Press POWER control on the Model 1011. It should light up.

(2) Set PROBE NUMBER control on the Model 1011 to 00-19.

(3) Turn CONTRAST fully clockwise on the System 1010. Program display should be filled with the "@" character with intensified character place marker indexed in the upper left corner (after DRO). If place marker is not indexed, depress both NEW PROGRAM buttons.

(4) Enter the following program:

```
RA1850T0
AP0011+1
BP0111-1
ST50%A1+
SP50%A1-
AM01P99P
BM01P99P
```

(5) Set the signal generator trigger output to approximately 600mV amplitude. Set the signal output to approximately 200mV pulse amplitude, 10 nsec. pulse width, and 300kHz repetition rate. If the signal generator has variable delay, adjust it to center the pulse on the screen. Observe the applied pulse on both channels. A channel will be separated vertically from B channel by approximately 2 divisions and B channel will be shifted approximately 6 ns horizontally.

f. Electrical Checkout Procedure.

(1) Press POWER control on the Model 1011. It should turn off. Disconnect Remote Sampling Units from connectors 00 and 01. Press POWER control again. It should light up. Monitor J00 pin K with the oscilloscope. The strobe signal should be a negative-going pulse of more than -9V amplitude and approximately 200 psec. wide. Monitor J01 pin K. The strobe signal there should be the same.

(2) Edit:

```
AP1811+1
BP1911-1
```

The strobe signals should disappear from J00 and J01 pins K.

(3) Edit:

```
AP0011+1
BP0111-1
```

The strobe signals as J00 and J01 pins K should reappear, the same as in step (1).

(4) Press POWER control on the Model 1011. It should turn off. Reconnect the Remote Sampling Units to connectors 00 and 01. Press POWER control again. It should light up. Set MEAS. MODE to CONTINUOUS and observe the display on the System 1010. The A channel should be above the other trace. The B channel should display the same pulse width and be slightly displaced horizontally with respect to the A trace (if the input cables are different lengths). Adjust the TRIGGER STAB control slightly if necessary to obtain a clean display. (It may be necessary to adjust the TRIG delay on the pulse generator to bring the signal into the time window shown on the CRT.)

(5) The digital readout (DRO) should indicate pulse width on channel A, approximately 10 nsec. The A trace should have intensified memory dots at 01 and 99 percent of the sweep, and should have an intensified measurement zone running from the first positive transition to the first negative transition.

(6) Edit:

```
SP50%B1+
```

The intensified zone should run from the first positive transition of the A trace to the first positive transition of the B trace. The DRO should read slightly less than in step (5).

(7) Edit:

```
ST50%B1+
SP50%B1-
```

The B trace should now have the intensified zone running from the first positive transition to the first negative transition, and the DRO should again read approximately 10 nsec.

CAUTION

DO NOT PERFORM STEPS 8 THROUGH 10 WITH 941 RSU's.

(B)

(8) If 942 Remote Sampling Units are being used, note the approximate amplitude of the two traces on the screen.

Edit:

AP0012+1
BP0112-1

Increase the signal generator output to approximately 2.0V pulse amplitude. The display on the screen should be approximately the same amplitude as it was before.

(9) Increase the signal generator output to approximately 20V pulse amplitude.

Edit:

AP0013+1
BP0113-1

The display on the screen should be approximately the same amplitude as it was before.

(10) Decrease the signal generator output to approximately 200mV pulse amplitude.

Edit:

AP0011+1
BP0111-0

The display on the screen should be approximately the same amplitude as it was before.

Edit:

RA1850A0
AM10R60G

The A trace should have intensified dots at the base and top of the pulse, and the DRO should be approximately +0200.MV.

(11) Repeat steps 1 through 10, as applicable, with probes connected to the other front panel jacks on the Model 1011. The strobe signals and DRO outputs will be correct only when the proper program is entered and the output of the signal generator is connected to the correct probes. For example, with the signal connected to probes connected to jacks 15 and 16, the program for measuring the pulse period should be:

RA1850T0
AP1511+1
BP1611-1
ST50%A1+
SP50%A1-
AM01P99P
BM01P99P

And the DRO should read approximately 10 nsec.

(12) Check out the Model 1011 per steps 1 through 11, as applicable, except that the PROBE NUMBER on the Model 1011 should be set to 20–39, and the programs should call out the proper locations of the Remote Sampling Units. For example, if the signal generator is connected to probes on jacks 04 and 05 on the second Model 1011, the program should call out:

AP2411+1
BP2511-1

Repeat the procedures with the PROBE NUMBER switch set to 40–59, 60–79, and 80–99.

4-6 CALIBRATION PROCEDURE MODEL 1011

a. General. This procedure gives the complete calibration procedure possible on the Model 1011. It should be performed at periodic calibration intervals.

b. Low Voltage P/S (A4)

(1) Connect the DVM to edge connector pin 20. Adjust potentiometer R11 until the DVM indicates 20.00V.

(2) Connect the DVM to edge connector pin C. The DVM shall indicate +170 ±10V.

(3) Connect the DVM to edge connector pin L. The DVM shall indicate +12 ±1V.

(4) Connect the DVM to edge connector pin F. The DVM shall indicate +5 ±0.5V.

(5) Connect the DVM to edge connector pin 16. The DVM shall indicate -20 ±2V.

4-7 RECOMMENDED SPARE PARTS

Tables 4-1 and 4-2 list the recommended spare parts required for maintenance of the System 1010 and Model 1011. The first part of each list includes active electronic components and high-failure items such as relays and fuses. The second part is a list of the major assemblies that may be purchased as spares by those who do not intend to repair subassemblies or components.

See Section 5 for a complete list of all parts of the System 1010 and Model 1011.

RECOMMENDED SPARE PARTS LIST

MODEL ANC 1010

DATE APRIL 1975

PART NUMBER	DESCRIPTION	QUANTITY USED	RECOM-MENDED SPARES	PRICE
	DIODE			
374-00063	1N969B 400MW 22V 5%	1	1	
00079	1N5244	3	1	
00082	1N4737 7.5V 10% 12V	2	1	
00083	1N5273	1	1	
376-00022	1N4448	20	21	
00031	1N270	1	1	
00034	1N4004	2	1	
00053	1N3719	3	1	
00079	Diode Hot Carrier	4	1	
00080	FJT 2000	4	1	
00081	MA43200	1	1	
00082	BD3	1	1	
00086	TD 264	1	1	
00089	MR 1120	4	1	
00300	MSD 6100	6	2	
00310	VS647	3	1	
00318	1N3714	1	1	
11764	E-H Selected	4	1	
378-00300	Rect 5KV PIV	3	1	
00301	SCR C20F	1	1	
	FUSE			
398-00003	3AMP S.B.	1	5	
00303	10AMP S.B.	1	5	
	LAMPS			
510-00019	Graticule Lamp	2	2	
00314	Lamp Assy. Amber	1	1	
00315	Lamp Awwy. Power	1	1	

LL57613

Table 4-1

RECOMMENDED SPARE PARTS LIST

MODEL 1010 Con't

DATE

PART NUMBER	DESCRIPTION	QUANTITY USED	RECOM-MENDED SPARES	PRICE
	Relays			
584-00040	Relay T	49	5	
00041	Relay	3	1	
00303	Relay	6	2	
40043	Relay	6	1	
	TRANSISTORS			
563-00067	DTS 423	1	1	
00070	2N3904	101	10	
00071	2N3906	107	10	
00073	2N3055	1	1	
00117	MFT 3001	8	2	
00118	MPSA 65	6	2	
00119	RCA 40374	5	1	
00122	Dual FET V233	4	1	
00125	MJ491	1	1	
00126	MJ481	1	1	
00135	2N5851	2	1	
00136	2N5551	3	1	
00137	MJE520	1	1	
00311	2N3440	2	1	
00312	2N3565	8	2	
00314	2N3568	4	1	
00318	2N3644	1	1	
00319	2N3646	7	2	
00321	2N3819	5	1	
00332	2N4360	2	1	
00333	2N4889	2	1	
00344	2N797	1	1	
00347	2N2914	9	2	
00700	MPS 3904	94	10	
00701	MPS 3906	106	10	
11767	E-H Selected	1	1	
17250	E-H Selected	1	1	
41702	E-H Seledted	2	1	

LL57613

Table 4-1 (continued)

3 OF 4

RECOMMENDED SPARE PARTS LIST

MODEL 1010 Con't

DATE

PART NUMBER	DESCRIPTION	QUANTITY USED	RECOM-MENDED SPARES	PRICE
	INTEGRATED CIRCUITS			
865-00024	SN7400N	89	8	
00026	N8280A	57	6	
00027	N8281A	5	1	
00050	SN7402	5	1	
00083	MC2065P	2	1	
00084	MC3022P	12	3	
00085	MC7407P	41	5	
00088	MC7420	6	2	
00089	MC7442P	7	2	
00090	MC7430P	10	2	
00091	MC7472P	1	1	
00092	MC7473P	16	3	
00093	MC7495P	3	1	
00094	MC7401P	1	1	
00095	MC7414P	5	1	
00096	N8233B	5	1	
00098	MC7410	6	2	
00147	SN7427	3	1	
00166	TM52501NC	1	1	
00183	SN74175	3	1	
00184	SN74174	1	1	
00190	SN7408	4	1	
00196	SN7451N	3	1	
00197	SN7474	2	1	
00244	2518B	2	1	
00245	SN7406	2	1	

LL57013

Table 4-1 (continued)

RECOMMENDED SPARE PARTS LIST

MODEL 1010 Con't

DATE

PART NUMBER	DESCRIPTION	QUANTITY USED	RECOM-MENDED SPARES	PRICE
	BOARDS			
41754	Sampler Bd. Assy.	1	1	
41757	Preamp Memory Assy.	1	1	
41760	Start/Stop Logic Assy.	1	1	
41763	Program Memory Assy.	1	1	
41766	Control Logic Assy.	1	1	
41769	Display Logic Assy.	1	1	
41775	Counter & DRO Formatter Assy.	1	1	
41778	Ver/Horz. High Voltage Assy.	1	1	
41781	Low Voltage Power Supply Assy.	1	1	
41805	Extender Card Assy.	1	1	
41893	Extender Card High Voltage Assy	1	1	

LL57613

Table 4-1 (continued)

RECOMMENDED SPARE PARTS LIST

MODEL 1011

DATE 8/12/75

PART NUMBER	DESCRIPTION	QUANTITY USED	RECOM-MENDED SPARES	PRICE
	ZENER DIODES			
374-00063	1N9693	1	1	
-00079	1N5244B	1	1	
	DIODES			
375-00022	1N4448	82	8	
-00034	1N4005	2	1	
-00081	MA4B200	1	1	
-00310	Diode Bridge	3	1	
-42057	E-H Selected	1	1	
-42058	E-H Selected	5	1	
	FUSES			
398-00017	3/4 Amp. S.B.	1	5	
	RELAY			
384-00041	Frost #36182A012	40	4	
	TRANSISTOR			
363-00070	2N3904	7	2	
-00071	2N3906	30	3	
-00120	2N4711	3	1	
-00137	MJE520	1	1	
-00311	2N3440	2	1	
-00314	2N3568	4	1	
-00319	2N3646	3	1	
-00333	2N4889	3	1	
-00342	MJ400	1	1	
-00347	2N2914	3	1	
	INTEGRATED CIRCUITS			
665-00024	MC7400	1	1	
-00050	MC7402	15	3	
-00080	MC74145	2	1	
-00084	MC3022	2	1	
-00085	MC7404	9	2	
-00088	MC7420	1	1	
-00089	MC7442	4	1	
00136	N8235	15	3	

LL57613

Table 4-2

(B)

SECTION 5
PARTS LIST

5-1 ORDERING INFORMATION

Replacement parts may be ordered through an E-H Representative or directly from the factory. To be certain of receiving the proper parts, always include the following information with the order:

a. Model number and serial number of the instrument.

b. Schematic reference number and subassembly name, if applicable, for which the part is intended. If the part does not have a schematic reference, the description from the parts list should be used.

c. E-H part number.

The warranty is given on page ii of this manual. For factory repair, contact the Customer Service Department of E-H Research Laboratories, Inc., at the address given on the title page of this manual. Include the following information:

a. Model number and serial number of the instrument on which the work is to be performed.

b. Details concerning the nature of the malfunction; or, type of repair desired.

5-2 HOW TO USE THIS PARTS LIST

The pages of this parts list correspond to the physical subsections of the instrument (printed circuit boards, chassis and assemblies, miscellaneous hardware). Component locations can be determined from the assembly drawings and schematic diagrams in Section 6. Each component appears only once in the parts list. At the head of each page is listed the part number for the complete assembly or subassembly whose parts are listed. Care should be taken to locate malfunctions to the lowest possible level of replacement part and thus avoid the time and cost involved in "over-repair".

5-3 MAJOR ASSEMBLIES

ASSEMBLY OR PART NO.	DESCRIPTION	SCHEMATIC REF.
System 1010		
251-41860	Front Panel Assembly	
253-41861	Rear Panel Assembly	
255-41862	Chassis, Power Supply Assy	
255-41863	Chassis, Card Deck Assembly	
257-41864	Side Panel Assembly	
671-41865	CRT Assembly	
401-41754	Sampler Board Assembly	A1
401-41757	Preamp Memory Board Assy	A2
401-41760	Start/Stop Logic Board Assy	A3
401-41763	Program Memory Board Assy	A4
401-41766	Control Logic Board Assy	A5
401-41769	Display Logic Board Assy	A6
401-41775	Counter & DRO Formatter Assy	A7
401-41778	Vert/Horiz. High Voltage Assy	A8
401-41781	Low Voltage Power Supply Assy	A9
820-41866	Standard Accessories	
825-41867	Completion Materials	
AMC 941	Remote Sampling Unit, Probe	
AMC 942	Remote Sampling Unit	
Model 1011		
251-41924	Front Panel Assembly	
253-41925	Rear Panel Assembly	
255-41926	Chassis Assembly	
257-41927	Side Panel Assembly	
402-41920	Decoding Logic Board Assy	A1
402-41904	Strobe Board Assembly	A2
402-41909	Relay Board Assembly	A3
402-41936	Low Voltage Power Supply	A4
820-41928	Standard Accessories	
825-41929	Completion Materials	
820-41987	Optional Accessories	

ASSEMBLY NO. 251-41860

DESCRIPTION FRONT PANEL ASSEMBLY

ASSEMBLY OR PART NO.	DESCRIPTION	SCHEMATIC REF.
250-41680	Front Panel	
262-41837	Bracket, Support, Fr. Frame	
262-41838	Bracket, Support, Chassis	
625-41869	"Trigger Switch Assy, Polarity"	
550-41873	Pot Assy, "Trigger Stability"	
550-41874	Pot Assy, "Trigger DC Level"	
550-41875	Pot Assy, "Position, A&B"	
550-41876	Pot Assy, "Position-Horiz."	
550- 00044	Pot, "Scale Illum-Pwr Sw." 1K CTS FR-GC-AW Series EAW-13122-LE	
550-00003	Pot "Contrast" 5K 2W 10%	
550-00038	Pot "Intensity" 10K 2W	
550-00042	Pot, "Focus" 1M CTS HV-550 Series #BE-1699	
550-00006	Pot, "Astigmatism" 100K 2W 10%	
635-00013	Switch, Push Button	
	"Beam Finder", "New Program" "Single Meas."	

ASSEMBLY NO. 251-41860

DESCRIPTION FRONT PANEL ASSEMBLY

ASSEMBLY OR PART NO.	DESCRIPTION	SCHEMATIC REF.
630-00013	Switch, Toggle"Meas'mt.Mode"	
510-00314	6.3V Lamp Assy, (Amber)	
510-00315	6.3V .04A Lamp Assy, "Power" (Grn)	
425-41682	Handle	
443-00039	Knob, Blk, ¼" Shaft	
700-00322	Socket, Lamp	
495-00042	Clip, Indicator Pilot Light	
702-42031	Harness, Front Panel	Prod Ref
702-42032	Wire List, Harness	Prod Ref
702-42033	Loose Wire List	Prod Ref
	-HARDWARE-	
206-00013	¼-20X3/4 (4)	Prod Ref

ASSEMBLY NO. 625-41869

DESCRIPTION SWITCH ASSEMBLY, "TRIGGER POLARITY"

ASSEMBLY OR PART NO.	DESCRIPTION	SCHEMATIC REF.
624-41822	Switch, Rotary (Oak Acorn)	
280-41868	Plate, Conn. Mounting	
721-00050	Connector, Minn.	J201-204
311-00319	Cap, .01µf Sprague 192P	C201,202
594-00470	Resistor 47Ω ½W 5%	R216
651-41886	Transformer, Bifilar 6T	T201-204
361-00305	Core, Ferrite	L201-203
*651-41970	Transformer, Bifilar 6T	T205
484-00310	Terminal TFE Insul.	

ASSEMBLY NO. 550- 41873

DESCRIPTION POTENTIOMETER ASSEMBLY, "TRIGGER STABILITY"

ASSEMBLY OR PART NO.	DESCRIPTION	SCHEMATIC REF.
550-00041	Pot, AB 500Ω AB#10M144	R214
596-00511	Resistor, 510 Ω 1/2W	R215
704-41965	Assy, Cable Coax	

ASSEMBLY NO. 550- 41874

DESCRIPTION POTENTIOMETER ASSEMBLY, "TRIGGER DC LEVEL"

ASSEMBLY OR PART NO.	DESCRIPTION	SCHEMATIC REF.
550-00040	Pot, AB 5K 10M143	R212
595-00202	Resistor 2 K ¼W 5%	R213
704-41965	Assy, Cable Coax	

ASSEMBLY NO. 550- 41875

DESCRIPTION POTENTIOMETER ASSEMBLY, "POSITION A & B"

ASSEMBLY OR PART NO.	DESCRIPTION	SCHEMATIC REF.
550-00041	Pot, AB 500Ω 10M144	R206,208
595-00201	Resistor 200Ω ¼W 5%	R207,209
704-41966	Assy, Cable Coax	
704-41964	Assy, Cable Coax	

ASSEMBLY NO. 550-41876

DESCRIPTION POTENTIOMETER ASSEMBLY
"POSITION HORIZ."

ASSEMBLY OR PART NO.	DESCRIPTION	SCHEMATIC REF.
550-00003	Pot, AB 5K 2W	R210
595-00163	Resistor 16K 1/4W 5%	R211
	Solder Lug (1)	Prod Ref

ASSEMBLY NO. 253-41861

DESCRIPTION REAR PANEL ASSEMBLY

ASSEMBLY OR PART NO.	DESCRIPTION	SCHEMATIC REF.
252-41834	Rear Panel	
570-00300	Fan	
258-40162	Cover, Fan Filter	
268-40386	Fan, Screen	
268-40385	Fan Filter	
	Tab, S/N	
700-00306	Connector, Cinch 37 Socket Pin	J109
700-00303	Connector Cinch 25 Pin	J102,103
704-41931	Cable Assy,' Analog	
700-00343	Connector, Cinch 15 Pin	J4
721-00013	Connector, BNC KC-79-35	J104,105
700-00337	Post, Slidelock	
396-00001	Fuse Holder	F101,102
316-00089	Filter, RFI/Pwr In (Com Corp 2B-4-7106)	J101
398-00003	Fuse 3A SB	F101
398-00303	Fuse 10A Fast Blow	F102
	-HARDWARE-	
	Spacer, Hex 6-32x½	
144-41877	Silkscreen, Rear Panel	Prod Ref

ASSEMBLY NO. 253-41861

DESCRIPTION REAR PANEL ASSEMBLY

ASSEMBLY OR PART NO.	DESCRIPTION	SCHEMATIC REF.
702-42029	Harness, Rear Panel	Prod Ref
702-42030	Wire List, Harness	Prod Ref
	-HARDWARE-	
202-00017	#4-40x3/8 FLHMS, Phil (8)	Prod Ref
215-00044	#4 Split Lockwasher (8)	Prod Ref
240-00006	#4 Hex Nut (8)	Prod Ref
203-00008	#6-32x3/8" BHMS (17)	Prod Ref
203-00018	#6-32x5/8" BHMS (4)	Prod Ref
240-00002	#6 Kep Nuts (17)	Prod Ref
460-00005	Solder Lug, BNC (2)	Prod Ref

ASSEMBLY NO. 706-41931

DESCRIPTION CABLE, ANALOG ASSEMBLY

ASSEMBLY OR PART NO.	DESCRIPTION	SCHEMATIC REF.
700-00306	Connector, DCM37S	J106
700-00309	Connector, 12 Pin Amphenol	J107,108
704-41962	Cable Assy, Coax	
704-41963	Cable Assy, Coax	
704-41964	Cable Assy, Coax	
776-00301	Cable, Coaxial RG188	

ASSEMBLY NO. 255-41862

DESCRIPTION CHASSIS, POWER SUPPLY ASSEMBLY

ASSEMBLY OR PART NO.	DESCRIPTION	SCHEMATIC REF.
254-41830	Chassis, Power Supply	
262-41845	Bracket, LV Card Mounting	
650-19605	Transformer, Pwr. "Tranex 4-2983"	T301
316-00308	Cap, El, 4500µf 50V	C302
316-00328	Cap, El, 8500µf 25V	C304-306
316-00320	Cap, El, 530µf 250V	C301
316-00087	Cap, El, 2600µf 50V	C303, C307
663-00125	Transistor MJ491	Q305
663-00067	Transistor DTS423	Q301
663-00126	Transistor MJ481	Q302
663-00073	Transistor 2N3055	Q303
663-00135	Transistor 2N5881	Q304
376-00089	Diode MR1120	CR301-304
378-00301	Diode, C20F	CR305
610-00137	Resistor, .1Ω 5W 5% Dale HL-5-01Z	R301
490-00300	Diode Mtg. Kit	CR305

ASSEMBLY NO. 255-41862

DESCRIPTION CHASSIS, POWER SUPPLY ASSEMBLY

ASSEMBLY OR PART NO.	DESCRIPTION	SCHEMATIC REF.
702-41878	Cable Harness, Hi Voltage	Prod Ref
702-41879	Wire List, Hi Voltage	Prod Ref
475-41844	Standoff, CRT Clamp Support	
405-00009	T.A. Mfg. Corp, TA5000BH36 Clamp, CRT Rear Support	
490-00049	IERC UP1-T03-B Heat Sink, Transistor	XQ 301,302, 304,305
743-00301	Conn. , PCB (2x22 pins)	XA9
144-41887	Silkscreen, Chassis	Prod Ref
144-41888	Silkscreen, Transistor	Prod Ref
405-00306	Cap, Clamp Small	XC301,303 307
405-00301	Cap, Clamp Med	XC302, 304-306
490-00001	Transistor Kit, Mtg	
475-00303	Solder Lug	
702-41880	Harness, Low Voltage	Prod Ref
702-41881	Wire List, Low Voltage	Prod Ref

ASSEMBLY NO. 255-41862

DESCRIPTION CHASSIS POWER SUPPLY ASSEMBLY

ASSEMBLY OR PART NO.	DESCRIPTION	SCHEMATIC REF.
	-HARDWARE-	
202-00019	4-40x½" BHMS (2)	Prod Ref
215-00023	#4 Flat Washer (2)	Prod Ref
460-00016	#4 Solder Lug, Locking (2)	Prod Ref
203-00005	#6-32x¼" BHMS (2)	Prod Ref
203-00008	#6-32x3/8" BHMS (31)	Prod Ref
203-00013	#6-32x½" BHMS (7)	Prod Ref
203-00028	#6-32x1½" BHMS (1)	Prod Ref
203-00015	#6-32x½" Pan Type B (10)	Prod Ref
240-00002	#6 Kep Nuts (37)	Prod Ref
475-00037	#6 Standoff 1" Long (2)	Prod Ref
460-00008	#6 Solder Lugs (1)	Prod Ref
215-00025	#6 Flat Washers (2)	Prod Ref
215-00301	#6 Nylon Shoulder Washer (2)	Prod Ref
460-00006	Solder Lug (1)	Prod Ref
460-00301	Solder Lug (4)	Prod Ref
500-00008	Mica Washers (1)	Prod Ref
202-00015	#4-40x3/8 FLHMS, Phil (8)	Prod Ref
240-00001	#4 Kep Nuts (8)	Prod Ref
475-00302	#6 Solder Lug, Locking (2)	Prod Ref

ASSEMBLY NO. 255-41863

DESCRIPTION CHASSIS ASSEMBLY, CARD DECK

ASSEMBLY OR PART NO.	DESCRIPTION	SCHEMATIC REF.
254-41831	Chassis, Card Deck	
260-41836	Frame , Card Guide (Front)	
260-41835	Frame , Card Guide (Rear)	
484-00039	Card Guide, SAE 125-CF	
743-00026	Connector, PCB Amphenol 72Pin 225-23622-101	
610-00138	Resistor 4K 10W 1% Dale RH-10	R302
702-42034	Cable Harness, Card Cage	Prod Ref
702-42035	Wire List, Card Cage	Prod Ref
702-42036	Wire List, Interconnect Card Cage	Prod Ref
144-41882	Silkscreen, Bottom	Prod Ref
144-41883	Silkscreen, Brkt (FNT) Card Guide	Prod Ref

ASSEMBLY NO. 257-41864

DESCRIPTION SIDE PANEL ASSEMBLY

ASSEMBLY OR PART NO.	DESCRIPTION	SCHEMATIC REF.
256-41833	Panel, Side L.H.	
256-41832	Panel, Side, R.H.	
256-41848	Gusset, Rear Corner	
	-HARDWARE-	
203-00010	#6-32x3/8" FLHMS, Phil (13)	Prod Ref
240-00002	#6 Kep Nuts (13)	Prod Ref

ASSEMBLY NO. 671-41865

DESCRIPTION C R T ASSEMBLY

ASSEMBLY OR PART NO.	DESCRIPTION	SCHEMATIC REF.
670-00042	Electron Tube, *CRT ETC-M1409	P31 V1
495-41839	Shield, CRT	
495-00062	Socket, CRT, Cinch 3M-14	(V1)
500-41870	Liner, Felt -CRT	
335-41696	Coil, Trace Alignment	
262-41842	Bracket, Rear Shield Mtg	
262-41843	Bracket, Angle	
262-41840	Bracket, Front Shield Support (Upper)	
262-41841	Bracket, Front Shield Support (Lower)	
639-00301	Switch, Slide, DPDT	
550-00304	Pot, "Trace Alignment" CRL 1K 1/5W	
495-00057	Socket, Light	L201,202
510-00019	Light, Graticule Illum. 28V	L201,202
700-00313	Connector, Hi Voltage	
	-HARDWARE-	
200-00008	#2-56x3/8" BHMS (2)	Prod Ref
215-00001	#2 Lockwasher (2)	Prod Ref
240-00005	#2 Hex Nut (2)	Prod Ref
202-00006	#4-40x1/4" BHMS (2)	Prod Ref

*OLDER 1010 MAY HAVE ETC-M1349, P/N 670-00039

ASSEMBLY NO. 671-41865

DESCRIPTION C R T ASSEMBLY

ASSEMBLY OR PART NO.	DESCRIPTION		SCHEMATIC REF.
202-00012	#4-40x3/8" BHMS	(3)	Prod Ref
215-00023	#4 Flat Washer	(3)	Prod Ref
240-00001	#4 Kep Nuts	(2)	Prod Ref
203-00005	#6-32x¼" BHMS	(7)	Prod Ref
203-00008	#6-32x3/8" BHMS	(4)	Prod Ref
215-00025	#6 Flat Washer	(2)	Prod Ref
460-00003	#6 Solder Lug	(1)	Prod Ref
240-00002	#6 Kpe Nuts	(7)	Prod Ref
205-00302	#10-32x3/4" Phil	(4)	Prod Ref

ASSEMBLY NO. 401-41754

DESCRIPTION SAMPLER BOARD

ASSEMBLY OR PART NO.	DESCRIPTION	SCHEMATIC REF.
400-41752	PC Board	
401-41754	Assembly Drawing	Prod Ref
140-41753	Schematic	Prod Ref
311-00357	Cap, Cerm 300pf	C38
311-00051	Cap, 10pf, Mica	C35,50,59
311-00087	Cap, 10pf, Cerm	C13,14,16
311-00088	Cap, 22pf VIT Axial	C51,60
311-00099	Cap, 20pf Erie #2933-000 ±5%	C28
311-00353	Cap, 100pf, 500V 5% Mica	C9, 47, 53, 62
311-00100	Cap, 100pf VIT Axial VK 27BW101K	C12,22,42, 43,69
311-00108	Cap, 220pf, VK 27BW221K	C40
311-00335	Cap, 470pf, Cerm 500V Mic	C1, 3
311-00094	Cap, .001µf VIT Radial VK23BW102M	C18, 48,57
311-00307	Cap, .0015µf, Cerm 200V 10%	C34,56,65
311-00309	Cap, .0022µf 200V 10%	C7
311-00315	Cap, .0047µf	C6
316-00302	Cap, .001µf, E1, 600V 5%	C30
316-00303	Cap, .01µf, E1, 100V 5%	C31
316-00304	Cap, .1µf, E1, 50V 5%	C32
316-00306	Cap 1µf, E1, 50V 5%	C33

ASSEMBLY NO. 401-41754

DESCRIPTION SAMPLER BOARD ASSEMBLY

ASSEMBLY OR PART NO.	DESCRIPTION	SCHEMATIC REF.
311-00101	Cap, .082µf Sprague 192P-8239R8	C5
311-00102	Cap, .22µf Sprague 192P 80V	C26
317-00301	Cap 82 pf Erie Button	C29
318-00306	Cap, 1µf, Tant 50V 10%	C2,4,8,10
		11,15,17,
		20,21,
		25,27,
		37,39,41,
		44-46,49,
		52,54,55,
		58,61,63,64
		70-73
318-00308	Cap, 4.7µf, Tant 50V 10%	C66,67
311-00010	Cap., Cerm., .001µf 1kv	C24
376-00318	Diode, 1N3714	CR 29
376-00053	Diode, 1N3719 Tunnel	CR25,26,
		36,
376-00022	Diode, 1N4448	CR [illegible],
		18-24,37,
		39-50
376-00082	Diode, BD3 Tunnel	CR 28
376-11764	Diode, FD777	CR31,32,
		34,35
376-00302	Diode, HPA 2900	CR16,17,
		33,38
376-00081	Diode, MA4B200 Siliconix SV110	CR51
376-00086	Diode, TD264 (GE)	CR27

ASSEMBLY NO. 401-41754

DESCRIPTION SAMPLER BOARD ASSEMBLY

ASSEMBLY OR PART NO.	DESCRIPTION	SCHEMATIC REF.
361-00301	U Core	K4-9
484-00310	Terminal Feedthrough	E2
484-00311	Terminal Standoff	E1,3-10
490-00018	Heat Sink	Q17
495-00040	Socket, 14 Pin	UL1-7
495-00054	Socket, 16 Pin	UL 8,9
551-00057	Potentiometer 2K ½W 10% A/B SV5021	R83-87
551-00077	Potentiometer 10K AB/SV1031	R167,185
551-00059	Potentiometer 50K AB/SV5031	R76,124
551-00065	Potentiometer 500Ω AB SV5011	R195
584-00040	Relay, 3 Pin 1 Form A IBM #776040 12V Pickup*	K1-3,10
584-40943	Coil Relay 12V	K4-9
584-00303	Relay, Form A Reed IBM 765972	K4-9
594-00101	Resistor 100Ω 1/8W 5%	R58
594-00100	Resistor 10Ω 1/8W 5%	R36,39
594-00300	Resistor 30Ω 1/8W 5%	R37,38
594-00330	Resistor 33Ω 1/8W 5%	R43, , ,
594-00202	Resistor 2K 1/8W 5%	R40
594-00180	Resistor 18Ω 1/8W 5%	R90

*IBM OUT OF BUSINESS
USE BABCOCK #PS-3011-12A
OR FROST #3618-1A0-12

ASSEMBLY NO. 401-41754

DESCRIPTION SAMPLER BOARD ASSEMBLY

ASSEMBLY OR PART NO.	DESCRIPTION	SCHEMATIC REF.
595-00680	Resistor 68Ω ¼W 5%	R91
595-00100	Resistor 10Ω ¼W 5%	R112,120, 122,166, 169,172, 184,188 191
595-00110	Resistor 11Ω ¼W 5%	R89
595-00200	Resistor 20Ω ¼W 5%	R10,23,
595-00510	Resistor 51Ω ¼W 5%	R14,53,54
595-00101	Resistor 100Ω ¼W 5%	R32, 88,104 R57
595-00151	Resistor 150Ω ¼W 5%	R25
595-00271	Resistor 270Ω ¼W 5%	R99
595-00301	Resistor 300Ω ¼W 5%	R160,178
595-00391	Resistor 390Ω ¼W 5%	R1[illegible]8,175
595-00201	Resistor 200Ω ¼W 5%	R21
595-00511	Resistor 510Ω ¼W 5%	R26,27
595-00621	Resistor 620Ω ¼W 5%	R109
595-00681	Resistor 680Ω ¼W 5%	R164,182
595-00751	Resistor 750Ω ¼W 5%	R29
595-00102	Resistor 1K ¼W 5%	R15,17,20, 30,31,107
595-00152	Resistor 1.5K ¼W 5%	R11,16,49
595-00202	Resistor 2K ¼W 5%	R8,55,56 78,79-82,119

ASSEMBLY NO. 401-41754

DESCRIPTION SAMPLER BOARD ASSEMBLY

ASSEMBLY OR PART NO.	DESCRIPTION	SCHEMATIC REF.
595-00272	Resistor 2.7K ¼W 5%	R7,42,52, 123, 103
595-00392	Resistor 3.9K ¼W 5%	R110
595-00472	Resistor 4.7K ¼W 5%	R9,51 149-156
595-00512	Resistor 5.1K ¼W 5%	R4-6,68-70 98,115,163 181
595-00562	Resistor 5.6K ¼W 5%	R126,128, 130,132, 134,136, 138,140,59
595-00622	Resistor 6.2K ¼W 5%	R28,
595-00682	Resistor 6.8K ¼W 5%	R168,186
595-00822	Resistor 8.2K ¼W 5%	R159,177
595-00103	Resistor 10K ¼W 5%	R24 73,96,
595-00362	Resistor 3.6K ¼W 5%	R59
595-00113	Resistor 11K ¼W 5%	R114, 141-148
595-00123	Resistor 12K ¼W 5%	R157,175
595-00153	Resistor 15K ¼W 5%	R41, 46,50 ,101
595-00203	Resistor 20K ¼W 5%	R18,97
595-00243	Resistor 24K ¼W 5%	R1-3,67,194 161,179,187
595-00393	Resistor 39K ¼W 5%	R106
595-00563	Resistor 56K ¼W 5%	R19

ASSEMBLY NO. 401-41754

DESCRIPTION SAMPLER BOARD ASSEMBLY

ASSEMBLY OR PART NO.	DESCRIPTION	SCHEMATIC REF.
595-00823	Resistor 82K ¼W 5%	R125
595-00154	Resistor 150K ¼W 5%	R111
595-00334	Resistor 330K ¼W 5%	R165,171, 183,190
595-00105	Resistor 1M ¼W 5%	R113
595-00033	Resistor 3.3Ω ¼W 5%	R195
596-00241	Resistor 240Ω 1/2W 5%	R47
596-00301	Resistor 300Ω ½W 5%	R48
596-00102	Resistor 1K ½W 5%	R100
596-00202	Resistor 2K ½W 5%	R162,180
596-00302	Resistor 3K ½W 5%	R170,189
610-00141	Resistor 350Ω 5W 5% w.w.	R75
610-00143	Resistor 3K Sprague 3W w.w. 5%	R108
610-00007	Resistor 560Ω 3W 5% w.w.	R77
610-00065	Resistor 750Ω 5W w.w.	R74
621-00062	Resistor 301Ω ¼W .5%	R117
621-00064	Resistor 499Ω ¼W .5%	R116
621-00063	Resistor 1.02K ¼W .5%	R121

ASSEMBLY NO. 401-41754

DESCRIPTION SAMPLER BOARD ASSEMBLY

ASSEMBLY OR PART NO.	DESCRIPTION	SCHEMATIC REF.
621-00065	Resistor 1.07K ¼W .5%	R174,193
621-00056	Resistor 4.27K ¼W .5%	R173,192
621-00058	Resistor 5.23K ¼W .5%	R71
620-00054	Resistor 15K 1/8W .5%	R72
616-00305	Resistor 200Ω 1/8W 1%	R12,118
616-00306	Resistor 301Ω 1/8W 1%	R13
616-00312	Resistor 549Ω 1/8W 1%	R35
616-00316	Resistor 1K 1/8W 1%	R139
616-00320	Resistor 2K 1/8W 1%	R137
616-00027	Resistor 2.74K 1/8W 1%	R34
616-00364	Resistor 51Ω 1/8W 5%	R105,44,45
616-00324	Resistor 4.02K 1/8W 1%	R135
616-00327	Resistor 4.99K 1/8W 1%	K33
616-00302	Resistor 75Ω 1/8W 1%	R92-95
616-00334	Resistor 10K 1/8W 1%	R131
616-00338	Resistor 20.0K 1/8W 1%	R129
616-00342	Resistor 40.2K 1/8W 1%	R127
617-00035	Resistor 8.06K ¼W 1%	R133
618-00118	Resistor 750Ω ⅓W 1%	R22

ASSEMBLY NO. 401-41754

DESCRIPTION SAMPLER BOARD ASSEMBLY

ASSEMBLY OR PART NO.	DESCRIPTION	SCHEMATIC REF.
475-41563	Spacer, Cap	(C30-33)
651-41282	Transformer Assy	T1
663-00122	Transistor U233	Q59,66
663-17250	Transistor SMT 506	Q15
663-00344	Transistor 2N797	Q14
663-00312	Transistor 2N3565	Q54,55, 61,62
663-00318	Transistor 2N3644	Q22
663-00319	Transistor 2N3646	Q13,26-28, 33,34
663-00322	Transistor 2N3819	Q29,30
663-00070	Transistor 2N3904	Q1-4,6,7,9-12, 16,17,20,21, 25,35,36
663-00332	Transistor 2N4360 Selected	Q58,65
663-41702	Transistor	Q57,64
663-11767	Transistor	Q23
663-00071	Transistor 2N3906	Q5,8,24,31, 32,37-53,56, 60,63,67.

ASSEMBLY NO. 401-41754

DESCRIPTION SAMPLER BOARD ASSEMBLY

ASSEMBLY OR PART NO.	DESCRIPTION	SCHEMATIC REF.
665-00024	IC MC 7400P Motorola	UL3,7
665-00098	IC MC 7410P Motorola	UL 4
665-00092	IC MC 7473P Motorola	UL 2
665-00095	IC MC 74145P Motorola	UL 8,9
665-00026	IC N8280A Signetics	UL 1,5,6
700-00300	Berg Pac, 3 Pin (#45590)	K1-3,10
721-00052	Connector	J1-13
655 -41283	Inductor, 1T 2 Bead	L 1
335-41281	Inductor 3T	L 2
311-00305	Cap, Cerm .001µf	C19
311-00355	Cap, 200pf DM	C36

ASSEMBLY NO. 401-41757

DESCRIPTION PREAMP MEMORY BOARD ASSEMBLY

ASSEMBLY OR PART NO.	DESCRIPTION	SCHEMATIC REF.
400-41755	PC Board	
401-41757	Assembly Drawing	Prod Ref
140-41756	Schematic	Prod Ref
311-00051	Cap, 10pf	C16,27
311-00353	Cap, 100pf	C11,13,19, 22,24,30
		4,8
311-00311	Cap, .0033µf	C12,18, 23,29
318-00306	Cap, 1µf	C1-3,5-7, 10,15,17,
		21,26,28, 32,37,38
318-00308	Cap, 4.7µf	C31,33,34
326-00023	Cap, 1500pf	C9,14,20, 25
374-00079	Diode, 1N5244	CR20,27
376-00022	Diode, 1N4448	CR1-14,16, 19,23,26
		29-32
376-00080	Diode, FJT 2000	CR15,18, 22,25
376-00300	Diode, MSD6100	CR17,21, 24,28
484-00310	Terminal	E1-4

ASSEMBLY NO. 401-41757

DESCRIPTION PREAMP MEMORY BOARD ASSEMBLY

ASSEMBLY OR PART NO.	DESCRIPTION	SCHEMATIC REF.
495-00040	Socket, 14 Pin	UL1-3,5-7
495-00054	Socket, 16 Pin	UL4,8
551-00060	Potentiometer, 5K	R5,43,86, 104,123,140
595-00200	Resistor 20Ω ¼W 5%	R28,66 .
595-00101	Resistor 100Ω ¼W 5%	R94,112, 131,148
595-00103	Resistor 10K ¼W 5%	R82,87,88, 90,92,93,
		97,105,106 108,110,111
		119,124,125 127,129,130
		134,141,142 144,146,147
		152
595-00123	Resistor 12K ¼W 5%	R3, [illegible]5, 20,24,46,
		50,54,58, 62
595-00243	Resistor 24K ¼W 5%	R29,67
595-00204	Resistor 200K ¼W 5%	R101,137
595-00244	Resistor 240K ¼W 5%	R83,120
595-00274	Resistor 270K ¼W 5%	R91,128
595-00304	Resistor 300K ¼W 5%	R109,145
595-00334	Resistor 330K ¼W 5%	R27,65

ASSEMBLY NO. 401-41757

DESCRIPTION PREAMP MEMORY BOARD ASSEMBLY

ASSEMBLY OR PART NO.	DESCRIPTION	SCHEMATIC REF.
595-00681	Resistor 680Ω ¼W 5%	R84,89,102 107,121,126 138,143
595-00102	Resistor 1K ¼W 5%	R98,135
616-00318	Resistor 1.3k 1/8W 1%	R4,42
595-00302	Resistor 3K ¼W 5%	R 81,118
595-00332	Resistor 3.3K ¼W 5%	R103,139
595-00512	Resistor 5.1K ¼W 5%	R10,14,18, 22,26,48, 52,56,60, 64,79,80, 85,96,100, 115,117,122 133,136
595-00622	Resistor 6.2K ¼W 5%	R77,78,9[illegible] 114,116
595-00822	Resistor 8.2K ¼W 5%	R9,13,[illegible] 2[illegible] 51,[illegible] 63
617-00303	Resistor 1.21K ¼W 1% MF	R6,44
596-00202	Resistor 2K ½W 5%	R38,76
596-00302	Resistor 3K ½W 5%	R95,113, 132,149
616-00020	Corning TC 100 PPM/C° Resistor 20Ω 1/8W 1%	R37,75
616-00030	Corning TC 100 PPM/C° Resistor 30.1Ω 1/8W 1%	R36,74
616-00360	Corning TC 100 PPM/C° Resistor 49.9Ω 1/8W 1%	R35,73

ASSEMBLY NO. 401-41757

DESCRIPTION PREAMP MEMORY BOARD ASSEMBLY

ASSEMBLY OR PART NO.	DESCRIPTION	SCHEMATIC REF.	Q.T. ASSEM.
616-00022	Corning TC 100 PPM/C° Resistor 11.3K 1/8W 1%	R3,41	2
616-00023	Corning TC 100PPM/C° Resistor 18.2K 1/8W 1%	R11,49	2
616-00024	Corning TC 100PPM/C° Resistor 35.7K 1/8W 1%	R7,45	2
616-00021	Corning TC 100PPM/C° Resistor 1.82K 1/8W 1%	R1,39	2
616-00025	Corning TC 100PPM/C° Resistor 4.53K 1/8W 1%	R19,57	2
616-00332	Resistor 9.09K 1/8W 1%	R15,53	2
616-00334	Resistor 10K 1/8W 1%	R2,40,150, 151	4
621-00055	Corning TC 50PPM/C° Resistor 2.43K 1/8W .5%	R23,61	2
621-00059	Corning TC 50PPM/C° Resistor 100Ω ¼W .5%	R34,72	2
621-00062	Corning TC 50PPM/C° Resistor 301Ω ¼W .5%	R3[illegible],71	2
621-00064	Corning TC 50PPM/C° Resistor 499Ω ¼W .5%	[illegible]	[illegible]
663-00347	Transistor 2N2914	Q3[illegible] 58	4
663-00117	Transistor MFE3001 Selected	Q30,31,40, 41,49,50,	
		59,60	8
663-00118	Transistor MPSA65	Q12,25,32, 42,51,61	6
663-00122	Transistor U233	Q11,24	2
663-00070	Transistor 2N3904	Q13,26-28, 35,36,38,	
		45-47,54, 55 57,64,	
		65	15

ASSEMBLY NO. 401-41757

DESCRIPTION PREAMP MEMORY BOARD ASSEMBLY

ASSEMBLY OR PART NO.	DESCRIPTION	SCHEMATIC REF.
663-00071	Transistor, 2N3906	Q1-10,14-23,29,34,
		37,43,44,
		48,53,56,
		62,63
700-00300	Berg Pac 3 Pin	K1-12
584-00040	Relay 1 Form A Pickup 12V IBM*	K1-12
721-00052	Connector	J1-8
665-00084	IC MC 3022P	UL 1,5
665-00024	IC MC 7400P	UL 3,7
665-00085	IC MC 7404P	UL 2,6
665-00095	IC MC 74145P	UL 4,8
758-00003	Buss Wire 22GA	R30,31, 68,69
795-00011	Sleeving, 22GA	R30,31, 68,69

*IBM OUT OF BUSINESS, USE BABCOCK RELAY TYPE PS-3011-12A OR FROST #3618-1A0-12

ASSEMBLY NO. 401-41760

DESCRIPTION START/STOP LOGIC BOARD ASSEMBLY

ASSEMBLY OR PART NO.	DESCRIPTION	SCHEMATIC REF.
400-41758	PC Board	
401-41760	Assembly Drawing	Prod Ref
140-41759	Schematic	Prod Ref
311-00309	Cap, .0022µf	C4,6,7,9
311-00331	Cap, .1µf	C2
318-00306	Cap, 1µf	C1,3,5,8, 13-17
318-00308	Cap, 4.7µf	C10-12
376-00022	Diode, 1N4448	CR1-38,41, 42,44,46-
		77,79,80, 82-86
376-00300	Diode, MSD6100	CR78,8[illegible]
495-00040	Socket, KC 14 Pin	UL1-21
551-00078	Potentiometer, 1KΩ A/B SV1021	R78
551-00057	Potentiometer, 2K	R103,128
551-00060	Potentiometer 5K	R 71
551-00059	Potentiometer 50K	R84,93,109 118

ASSEMBLY NO. 401-41760

DESCRIPTION START/STOP LOGIC BOARD ASSEMBLY

ASSEMBLY OR PART NO.	DESCRIPTION	SCHEMATIC REF.
584-00040	Relay 1 Form A Pickup 12V IBM #766040	*K1-32,36-47
584-00041	Relay 2 Form A Pickup 12V IBM #766043	** K33-35
595-00100	Resistor 10Ω ¼W 5%	R160,161
595-00101	Resistor 100Ω ¼W 5%	R77,96,121
595-00681	Resistor 680Ω ¼W 5%	R94,100, 119,125
595-00911	Resistor 910Ω ¼W 5%	R152,158
595-00102	Resistor 1K ¼W 5%	R130,133, 135,137
		139,146, 147
595-00152	Resistor 1.5K ¼W 5%	R153,159
595-00202	Resistor 2K ¼W 5%	R148-151
		R154-157
595-00242	Resistor 2.4K ¼W 5%	R132,134, 136,138,
		144,145
595-00302	Resistor 3K ¼W 5%	R67,131, 140-143
595-00512	Resistor 5.1K ¼W 5%	R68,75,83, 99,108,124
595-00562	Resistor 5.6K ¼W 5%	R104,129
595-00622	Resistor 6.2K ¼W 5%	R35,36,39, 40,51,52,
		55,56

*FROST CONTROLS #3618-1A0-12 or BABCOCK Relay #PS-301-12A
** FROST #3618-2A0-12

ASSEMBLY NO. 401-41760

DESCRIPTION START/STOP LOGIC BOARD ASSEMBLY

ASSEMBLY OR PART NO.	DESCRIPTION	SCHEMATIC REF. •
595-00822	Resistor 8.2K ¼W 5%	R82,91,102, 107,116
		127
595-00103	Resistor 10K ¼W 5%	R34,37,38, 41,50,53,
		54,57,73, 74,90,115
595-00113	Resistor 11K ¼W 5%	R80,81,105 106
595-00123	Resistor 12K ¼W 5%	R101,126
595-00203	Resistor 20K ¼W 5%	R97,122
595-00243	Resistor 24K ¼W 5%	R42-49 58-65
595-00393	Resistor 39K ¼W 5%	R98,123
595-00134	Resistor 130K ¼W 5%	R76
595-00274	Resistor 270K ¼W 5%	R95,120
596-00302	Resistor 3K ½W 5%	R79
616-00316	Corning TC 100PPM/C° Resistor 1K 1/8W 1%	R1,2,17,18 33,66
616-00026	Corning TC 100PPM/C° Resistor 2.05K 1/8W 1%	R3,4,7,8, 19,20,23,
		24
616-00324	Resistor 4.02K 1/8W 1%	R5,6,21, 22
616-00333	Resistor 9.53K 1/8W 1%	R69
616-00334	Resistor 10K 1/8W 1%	R70,86-89
		111-114
616-00335	Resistor 13K 1/8W 1%	R72

ASSEMBLY NO. 401-41760

DESCRIPTION START/STOP LOGIC BOARD ASSEMBLY

ASSEMBLY OR PART NO.	DESCRIPTION	SCHEMATIC REF.
616-00007	Resistor 162K 1/8W 1%	R85,92,110 117
621-00061	Corning TC 50 PPM/C° Resistor 10.1K ¼W .5%	R9,10,25, 26
621-00060	Resistor 20.3K ¼W .5%	R11,12,15, 16,27,28,
		31,32
621-00057	Resistor 40.2K ¼W .5%	R13,14,29, 30
663-00347	Transistor 2N2914	Q46,53
663-00321	Transistor 2N3819	Q37,38
663-00070	Transistor 2N3904	Q1-34,40,41
		45,48,51,44 52,55-67
663-00071	Transistor 2N3906	Q35,36,39, 42,43,47,
		49,50,54
665-00024	IC MC 7400P	UL1,2,4,5, 7,8,11,14,
		16,18,20
665-00085	IC MC 7404P	UL6,9,10, 15,17,19,21
665-00092	IC MC 7473P	UL 3
665-00093	IC MC 7495P	UL 12,13

ASSEMBLY NO. 401-41760

DESCRIPTION START/STOP LOGIC BOARD ASSEMBLY

ASSEMBLY OR PART NO.	DESCRIPTION	SCHEMATIC REF.
700-00300	Berg Pack #4559 3 Pin	K1-32, 36-47
700-00301	Berg Pack #4560 4 Pin	K33-35
721-00052	Connector	J1,2

ASSEMBLY NO. 401-41763

DESCRIPTION PROGRAM MEMORY BOARD ASSEMBLY

ASSEMBLY OR PART NO.	DESCRIPTION	SCHEMATIC REF.
400-41761	PC Board	
401-41763	Assembly Drawing	Prod Ref
140-41762	Schematic	Prod Ref
311-00305	Cap, .001µf	C1-7,17
311-00309	Cap, .0022µf	C8-14
318-00306	Cap, 1µf	C16,18-29
318-00041	Cap, 47µf 6V Kemet T360B476M006	C15
376-00022	Diode, 1N4448	CR1
495-00040	Socket, 14 Pin	UL 1-27, 29-68
495-00054	Socket, 16 Pin	UL28
595-00104	Resistor 100K ¼W 5%	R6
595-00202	Resistor 2K ¼W 5%	R1-4
595-00511	Resistor 510Ω ¼W 5%	R5,7
665-00083	IC MC 2065P	UL61
665-00024	IC MC 7400P	UL1-9,12-18 44,46
665-00085	IC MC 7404P	UL10,11, 45,62
665-00090	IC MC 7430P	UL 27

ASSEMBLY NO. 401-41763

DESCRIPTION PROGRAM MEMORY BOARD ASSEMBLY

ASSEMBLY OR PART NO.	DESCRIPTION	SCHEMATIC REF.
665-00089	IC MC 7442P	UL28
665-00026	IC N8280A	UL19-26, 30-43,
		47-60, 63-68
665-00027	IC N8281A	UL29
663-00070	Transistor 2N3904	Q1

ASSEMBLY NO. 401-41766

DESCRIPTION CONTROL LOGIC BOARD ASSEMBLY

ASSEMBLY OR PART NO.	DESCRIPTION	SCHEMATIC REF.
400-41764	PC Board	
401-41766	Assembly Drawing	Prod Ref
140-41765	Schematic	Prod Ref
311-00362	Cap, 820pf	C26
311-00353	Cap, 100pf	C1-4,25,30
311-00063	Cap, 220pf	C15,19, 24,29
311-00335	Cap, 470pf	C9,10,16, 22,27,32
311-00309	Cap, .0022µf	C5-8
311-00315	Cap, .0047µf	C18,21, 28
318-00306	Cap, 1µf	C11-14, 31,33, 35-43
376-00022	Diode, 1N4448	CR2
318-00307	Cap, 3.3µf 50V 10%	C17,20
495-00040	Socket, IC 14 Pin	UL1-18, 20-53
495-00054	Socket, IC 16 Pin	UL 19
311-00318	Cap., .0068µf 200V 10%	C23
595-00102	Resistor 1K ¼W 5%	R72,92,95, 106,107
595-00332	Resistor 3.3K ¼W 5%	R71
595-00822	Resistor 8.2K ¼W 5%	R25-36
311-00010	Cap., Cerm., .001µf 1KV	C26

ASSEMBLY NO. 401-41766

DESCRIPTION CONTROL LOGIC BOARD ASSEMBLY

ASSEMBLY OR PART NO.	DESCRIPTION	SCHEMATIC REF.
595-00512	Resistor 5.1K ¼W 5% q	R37-48,58-63,65,67,
		70,73,75,
		80,82,83,85
		87,89,93,98
		100,101,104
595-00103	Resistor 10K ¼W 5%	R50-54,57,
		69,74,76,
		79,81,84,
		86,88,90,
		94,99,102
		105,108,109
595-00133	Resistor 13K ¼W 5%	R2,4,6,8,
		10,12,14,16
		18,20,22,24
595-00165	Resistor 1.6M ¼W 5%	R1
595-00106	Resistor 10M ¼W 5%	R68
616-00316	Resistor 1K 1/8W 1%	R49
616-00354	Resistor 200K 1/8W 1%	R7
617-00320	Resistor 402K ¼W 1%	R5
617-00314	Resistor 806K ¼W 1%	R3
611-00008	Resistor 1.990K .01% ±5PPM/C° Vishey S102	R23
611-00009	Resistor 3.987K .02% ± 5PPM/C° Vishey S102	R21
611-00010	Resistor 7.986K .05% ± 5PPM/C° Vishey S102	R19
611-00006	Resistor 16.0K .1% ±50PPM/C° Vishey S102	R17
611-00005	Resistor 20.03K .1% ±50PPM/C° Vishey S102	R15

ASSEMBLY NO. 401-41766

DESCRIPTION CONTROL LOGIC BOARD ASSEMBLY

ASSEMBLY OR PART NO.	DESCRIPTION	SCHEMATIC REF.
611-00007	Resistor 40.2K 1/8W .2%	R13
616-00007	Resistor 162K 1/8W 1%	R9
611-00011	Resistor 10K ¼W .5%	R56
611-00012	Resistor 10.7K ¼W .5%	R55
611-00013	Resistor 80.6K ¼W .5%	R11
665-00083	IC MC 2065P	UL 33
665-00084	IC MC3022P	UL20-23, 37-40
665-00024	IC MC 7400P	UL5,7,8, 10,11,15,17
		18,24,26,31 34-36,41,43
		44,46,47, 49-51
665-00085	IC MC 7404P	UL9,16,30, 32,42,45
665-00098	IC MC 7410P	UL29
665-00090	IC MC 7430P	UL1-4,6
665-00092	IC MC 7473P	UL25,27,53
665-00095	IC MC 74145	UL 19
665-00026	IC N8280A	UL12-14,28, 48,52
663-00070	Transistor 2N3904	Q25,26
663-00071	Transistor 2N3906	Q1-24

ASSEMBLY NO. 401-41769

DESCRIPTION DISPLAY LOGIC BOARD ASSEMBLY

ASSEMBLY OR PART NO.	DESCRIPTION	SCHEMATIC REF.
400-41767	PC Board	
401-41769	Assembly Drawing	Prod Ref
140-41768	Schematic	Prod Ref
311-00009	Cap, Cerm 500pf 1KV	C17
311-00335	Cap, Mica 470 pf 500V	C63
311-00017	Cap, Cerm .002µf	C2[illegible],13
311-00026	Cap, Cerm 400pf	C19
311-00033	Cap, Cerm .0015µf	C18
311-00074	Cap, Cerm .01µf 100V	CR27-34, 36-62
311-00300	Cap, Mica 150pf 500V	C8,9
311-00305	Cap, Cerm .001µf 200V	C26
311-00334	Cap, Mica 330pf 500V	C24
311-00345	Cap, Mica 30pf 500V	C7
311-00353	Cap, Mica 100pf 500V	C10,11,16, 21,22
311-00355	Cap, Mica 200pf 500V	C14
311-00027	Cap, Cerm 820pf 1KV, 10%	C12,23
318-00041	Cap, Tant 47µf 6V	C15, 25
318-00306	Cap, Tant 1µf 50V	C4-6
318-00308	Cap, Tant 4.7µf 50V	C1-3

ASSEMBLY NO. 401-41769

DESCRIPTION DISPLAY LOGIC BOARD ASSEMBLY

ASSEMBLY OR PART NO.	DESCRIPTION	SCHEMATIC REF.
374-00082	Diode, 1N4737	CR1-2
376-00022	Diode, 1N4448	CR3-23
551-00065	Potentiometer 500Ω	R1-3
595-00100	Resistor 10Ω ¼W 5%	R4,5
595-00101	Resistor 100Ω ¼W 5%	R48,71,115
595-00102	Resistor 1K ¼W 5%	R43,56,58, R60,69 R86,99-105,114
595-00103	Resistor 10K ¼W 5%	R6,7,9,11, R41,50, 63,64,67
595-00104	Resistor 100K ¼W 5%	R54
595-00122	Resistor 1.2K ¼W 5%	R46,53, 73,70
595-00152	Resistor 1.5K ¼W 5%	R10,33,44, 61,106-112
595-00182	Resistor 1.8K ¼W 5%	R35,36,37
595-00202	Resistor 2K ¼W 5%	R57,62,117 116
595-00221	Resistor 220Ω ¼W 5%	R51,113
595-00272	Resistor 2.7K ¼W 5%	R87-92
595-00304	Resistor 300K ¼W 5%	R8
595-00471	Resistor 470Ω ¼W 5%	R39
595-00472	Resistor 4.7K ¼W 5%	R93-98
595-00511	Resistor 510Ω ¼W 5%	R55
595-00512	Resistor 5.1K ¼W 5%	R40,42,47, 49,65,66,118

ASSEMBLY NO. 401-41769

DESCRIPTION DISPLAY LOGIC BOARD ASSEMBLY

ASSEMBLY OR PART NO.	DESCRIPTION	SCHEMATIC REF.
595-00681	Resistor 680Ω ¼W 5%	R45,52, 59,72
595-00752	Resistor 7.5K ¼W 5%	R74-85
595-00562	Resistor 5.6K 1/4W 5%	R68
616-00316	Resistor 1K 1/8W 1% MF	R24-34
616-00320	Resistor 2K 1/8W 1% MF	R12-23
663-00070	Transistor, 2N3904	Q1,2
665-00024	IC SN7400N	IC3-6,13, 14,24,41, 42,45
665-00026	IC N8280A	IC46,47
665-00027	IC N8281A	IC16,17, 21,27
665-00050	IC SN7402N	IC54,56, 57,60,62
665-00084	IC MC3022P	IC26,29
665-00085	IC MC7404P	IC1,7,9, 11,22,33, 36,64,68 69
		34
665-00088	IC MC7420P	IC25,28,
665-00089	IC MC7442P	IC58,63, 66,71
665-00090	IC MC7430P	IC30,35,40
665-00091	IC MC7472P	IC10

ASSEMBLY NO. 401-41769

DESCRIPTION DISPLAY LOGIC BOARD ASSEMBLY

ASSEMBLY OR PART NO.	DESCRIPTION	SCHEMATIC REF.
665-00092	IC MC7473P	IC2,8,12, 15,18-20
665-00096	IC N8233B	IC31,32
665-00147	IC SN7427N	IC55,59,61
665-00166	IC TMS2501NC	IC23
665-00183	IC SN74175N	IC43,48,49
665-00184	IC SN74174N	IC50
665-00190	IC SN7408N	IC38,44, 51,52
665-00196	IC SN7451N	IC70,73,74
665-00197	IC SN7474N	IC39,65
665-00244	IC 2518B	IC67,72
665-00245	IC SN7406	IC53,37
721-00052	Connector	J1, 2
722-00005	Crystal 1MHz	Y1

ASSEMBLY NO. 401-41775

DESCRIPTION COUNTER & DRO FORMATTER ASSEMBLY

ASSEMBLY OR PART NO.	DESCRIPTION	SCHEMATIC REF.
400-41773	PC Board	
401-41775	Assembly Drawing	Prod Ref
140-41774	Schematic	Prod Ref
311-00335	Cap, 470pf 500V	C1
311-00353	Cap, 100pf 500V	C2,4-8
311-00305	Cap, .001µf 200V	C3, 9
318-00306	Cap, 1µf 35V	C10-28
318-00308	Cap, 4.7µf 35V	C29
700-00116	Connector 3M 3429-2002	J1
376-00022	Diode, 1N4448	CR1-26
495-00040	Socket, IC 14 Pin	UL 1-28,30 27,39,42 43,45-50
495-00054	Socket, IC 16 Pin	UL 29,38, 40,41,44
595-00103	Resistor 10K ¼W 5%	R6-11,13
595-00302	Resistor 3K ¼W 5%	R14-19
595-00511	Resistor 510Ω ¼W 5%	R20-25
595-00512	Resistor 5.1K ¼W 5%	R1-5,12, 26-,28

ASSEMBLY NO. 401-41775

DESCRIPTION COUNTER & DRO FORMATTER ASSEMBLY

ASSEMBLY OR PART NO.	DESCRIPTION	SCHEMATIC REF.	Q.T. ASSEM.
665-00024	IC MC 7400P	UL2,4-6, 10,12,13,15	
		20,22,24-26 30,34,36,39	
		42	18
665-00085	IC MC 7404P	UL1,8,17, 19,23,27,	
		32,43,49, 50	10
665-00098	IC MC 7410P	UL 16,18, 28,47 .	4
665-00088	IC MC 7420P	UL 31,35	2
665-00090	IC MC 7430P	UL 7	1
665-00089	IC MC 7442P	UL 40,44	2
665-00092	IC MC 7473P	UL3,37,46	3
665-00093	IC MC 7495P	UL 11	1
665-00096	IC N8233B	UL29,3[illegible]	[illegible]
665-00026	IC N8280A	UL[illegible] 33	[illegible]
665-00094	IC MC 7401P	UL45	1

ASSEMBLY NO. 401-41778

DESCRIPTION VERT/HORZ. HIGH VOLTAGE ASSEMBLY

ASSEMBLY OR PART NO.	DESCRIPTION	SCHEMATIC REF.
400-41776	PC Board	
401-41778	Assembly Drawing	Prod Ref
140-41777	Schematic	Prod Ref
311-00017	Cap., .002µf 1KV	C32
311-00353	Cap, 100pf	C22
311-00300	Cap, 150pf	C20,21, 27-30
311-00063	Cap, 220pf	C24
331-00093	Cap, .001µf 3KV	C18
311-00315	Cap, .0047µf	C26
311-00320	Cap, .01µf 3KV	C10,14-17 19
311-00325	Cap, .033µf	C9
311-00319	Cap, .01µf	C
316-00086	Cap, 1µf 250V	C
318-00306	Cap, 1µf	C2,4,6,8, 23,25,31
318-00308	Cap, 4.7µf	C3,7
318-00307	Cap, 3.3µf	C11,12
376-00034	Diode, 1N4005	CR2
376-00022	Diode, 1N4448	CR1,6-16 18
374-00062	Diode, 1N983B	CR5
378-00300	Diode, MR250-5	CR3,4,17

ASSEMBLY NO 401-41778

DESCRIPTION VERT/HORZ. HIGH VOLTAGE ASSEMBLY

ASSEMBLY OR PART NO.	DESCRIPTION	SCHEMATIC REF.
450-00046	Connector Pins	E1-4
495-00040	Socket, IC 14 Pin	UL 1-10
616-00081	Resistor 301Ω 1/8W 1% MF	R5
595-00100	Resistor 10Ω ¼W 5%	R46
617-00074	Resistor 100Ω ¼W 1% MF	R12
595-00471	Resistor 470Ω ¼W 5%	R14,16
595-00511	Resistor 510Ω ¼W 5%	R34
595-00561	Resistor 560Ω ¼W 5%	R8,9
595-00102	Resistor 1K ¼W 5%	R21,36,37, 69,78
595-00152	Resistor 1.5K ¼W 5%	R40,43
596-00202	Resistor 2K ¼W 5%	R18
595-00242	Resistor 2.4K ¼W 5%	R52, 63
610-00019	Resistor 10Ω, 3W, WW	R79
595-00302	Resistor 3K ¼W 5%	R10,77, 62
595-00332	Resistor 3.3K ¼W 5%	R41,42,57, 58,66,67,
		72,75,
595-00515	Resistor 5.1M ¼W 5%	R81
595-00472	Resistor 4.7K ¼W 5%	R65
595-00512	Resistor 5.1K ¼W 5%	R53,54
595-00822	Resistor 8.2K ¼W 5%	R20

ASSEMBLY NO. 401-41778

DESCRIPTION VERT/HORZ. HIGH VOLTAGE ASSEMBLY

ASSEMBLY OR PART NO.	DESCRIPTION	SCHEMATIC REF.
595-00103	Resistor 10K ¼W 5%	R23,50,56, 74
595-00203	Resistor 20K ¼W 5%	R7,15,39, 44,64,68
595-00303	Resistor 30K ¼W 5%	R71
595-00273	Resistor 27K ¼W 5%	R55
595-00513	Resistor 51K ¼W 5%	R38,45,49
595-00823	Resistor 82K ¼W 5%	R22
595-00104	Resistor 100K ¼W 5%	R48
617-00328	Resistor 750K ¼W 1% MF	R25
595-00514	Resistor 510K 1/4W 5%	R29,30
596-00152	Resistor 1.5K ½W 5%	R3,4
596-00103	Resistor 10K ½W 5%	R35
596-00203	Resistor 20K ½W 5%	R28
597-00514 (514)	Resistor 510K 1W 5% (510K)	R27
610-00131	Resistor 4.7Ω 2W w.w. 5%	R33,76
610-00128	Resistor 6K 5W 5% w.w.	R1,2,11,17
610-00127	Resistor 12K 5W 5% w.w.	R61
610-00012	Sprague Blue Jacket Resistor 5 K 5 W 5 % w.w.	R59
610-00142	Resistor 6M ±5% 2.5W 10KV	R26
650-00302	Transformer High Voltage	T1
595-00123	Resistor 12K ¼W 5%	R73

*CORNING OUT OF BUSINESS, USE RESISTOR PRODUCTS CO (RPC) TYPE ROX-1 6M ±5% ±200PPM/C° 2.5W, 10KV

ASSEMBLY NO. 401-41778

DESCRIPTION VERT/HORZ HIGH VOLTAGE ASSEMBLY

ASSEMBLY OR PART NO.	DESCRIPTION	SCHEMATIC REF.
663-00312	Transistor 2N3565	Q2,4,8,10
663-00321	Transistor 2N3819	Q13
663-00070	Transistor 2N3904	Q18,19,22,23, 25,30,32,34
663-00333	Transistor 2N4889	Q26
663-00136	Transistor 2N5551 (MO)	Q15,27,33
663-00119	Transistor RCA 40374	Q1,5,7,11, 14,
663-00071	Transistor 2N3906	Q3,6,9,12, 16,17,20,
		21,24,28, 29,31,
10099-01	Tag Danger Hi Voltage (1)	Prod Ref
584-00040	Relay IBM* 1 Form A Pickup 12V	K-1
700-00300	Berg Pac	K1
610-00166	Resistor 15M 1W 5% 3.5KV	R81
721-00052	Connector	J1-4
551-00065	Potentiometer 500Ω A/B SV5011	R6,13
551-00060	Potentiometer 5K	R19,51, 60,70
551-00059	Potentiometer 50K	R47
551-00056	Potentiometer 100K	R24,31, 32

*FROST CONTROL # or Babcock Relays #PS3011-12A

ASSEMBLY NO. 401-41778

DESCRIPTION VERT/HORZ HIGH VOLTAGE ASSEMBLY

ASSEMBLY OR PART NO.	DESCRIPTION	SCHEMATIC REF.
665-00024	IC MC 7400 P	UL 2,4, 6-8, 10
665-00085	IC MC 7404 P	UL3,9
665-00088	IC MC 7420 P	UL 5
665-00092	IC MC 7473 P	UL 1
262-40267	Bracket, Transformer	
268-41847	Shield H.V. Front	
500-41895	Shield H.V Rear	
	-HARDWARE-	
	Screw, 6-32 P.H.	
202-00006	Screw, 4-40 P.H.	
240-00002	Hex Nuts 6-32	
240-00001	Hex Nuts 4-40	

ASSEMBLY NO 401-41781

DESCRIPTION LOW VOLTAGE POWER SUPPLY ASSEMBLY

ASSEMBLY OR PART NO.	DESCRIPTION	SCHEMATIC REF.
400-41779	PC Board	
401-41781	Assembly Drawing	Prod Ref
140-41780	Schematic	Prod Ref
311-00063	Cap, 220pf	C10
311-00305	Cap, .001µf	C5
311-00325	Cap, .033µf	C4,8
311-00328	Cap, .047µf	C3,14
316-00085	Cap, 20-20µf 250V	C2
316-00310	Cap, 8µf 50V	C1
316-00035	Cap, 100µf 25V	C11
318-00306	Cap, 1µf	C13
318-00308	Cap, 4.7µf	C6,7,15,16
318-00035	Cap, 18µf 35V	C9,12
320-00302	Cap, .22µf	C17
374-00079	Diode, 1N5244B 14V 5% Zener	CR4
374-00063	Diode 1N969B 22V 5%	CR3
376-00310	Diode, VS647	CR1,5,7
376-00034	Diode, 1N4005	CR2,6
551-00057	Potentiometer 2K	R11

ASSEMBLY NO. 401-41781

DESCRIPTION LOW VOLTAGE POWER SUPPLY ASSEMBLY

ASSEMBLY OR PART NO.	DESCRIPTION	SCHEMATIC REF.
595-00101	Resistor 100Ω ¼W 5%	R44,45
595-00241	Resistor 240Ω ¼W 5%	R6
595-00511	Resistor 510Ω 1/4W 5%	R30
595-00392	Resistor 3.9K ¼W 5%	R33
595-00472	Resistor 4.7K ¼W 5%	R2,8,16,20, 24,36,42
595-00203	Resistor 20K ¼W 5%	R40,41
595-00303	Resistor 30K ¼W 5%	R15
595-00393	Resistor 39K ¼W 5%	R13
595-00513	Resistor 51K ¼W 5%	R35
595-00753	Resistor 75K ¼W 5%	R29
595-00823	Resistor 82K ¼W 5%	R3
595-00154	Resistor 150K ¼W 5%	R18
595-00244	Resistor 240K ¼W 5%	R28
595-00564	Resistor 560K ¼W 5%	R17
595-00105	Resistor 1M ¼W 5%	R5
595-00185	Resistor 1.8M ¼W 5%	R7
596-00134	Resistor 130K ⅓W 5%	R14
596-00274	Resistor 270K ⅓W 5%	R19
610-00121	Resistor 1Ω 2W w.w. 5%	R37
595-00184	Resistor 180K ¼W 5%	R4

ASSEMBLY NO. 401-41781

DESCRIPTION LOW VOLTAGE POWER SUPPLY ASSEMBLY

ASSEMBLY OR PART NO.	DESCRIPTION	SCHEMATIC REF.
610-00123	Resistor .1Ω 2W 5% w.w.	R34
610-00139	Resistor .43Ω 2W 5% w.w.	R21
610-00307	Resistor 1.5Ω 2W 5% w.w.	R9
610-00140	Resistor 2.4Ω 2W 5% w.w.	R27
616-00327	Resistor 4.99K 1/8W 1%	R23,26,32
616-00028	Resistor 6.81K 1/8W 1%	R12
616-00029	Resistor 15K 1/8W 1%	R22
616-00338	Resistor 20K 1/8W 1%	R38
618-00105	Resistor 165K ½W 1%	R10,25,31
618-00106	Resistor 169K ½W 1%	R39
610-00019	Resistor 10Ω 3W w.w.	R1
663-00347	Transistor 2N2914	Q6,10,15
663-00311	Transistor 2N3440	Q2,3
663-00314	Transistor 2N3568	Q5,8,9, 14
663-00319	Transistor 2N3646	Q13
663-00333	Transistor 2N4889	Q1
663-00137	Transistor MJE520 (MO)	Q12
663-00070	Transistor 2N3904	Q7,11
663-00071	Transistor 2N3906	Q4,16-20

ASSEMBLY NO. 401-41781

DESCRIPTION LOW VOLTAGE POWER SUPPLY ASSEMBLY

ASSEMBLY OR PART NO.	DESCRIPTION	SCHEMATIC REF.
	-HARDWARE-	
	Screw, 4-40x3/8 PHD	
	Hex Nut 4-40	

ASSEMBLY NO. 820-41866

DESCRIPTION STANDARD ACCESSORIES

ASSEMBLY OR PART NO.	DESCRIPTION	SCHEMATIC REF.
148-07203	Manual	
693-41884	Program Lines Terminator	
700-00304	Connector, 25 Pin DBM-25P	
700-00305	Connector, 37 Pin DCM-37P	
706-42028	(Option 1 only) Cable Assy, BCD Output	
700-00117	Cannon DC51222-1 Slidelock, 37 Pin Conn	
786-00002	Power Cord	
891-00311	Cannon St. Plastk Junction Shell Hood, 37 Pin Connector Type	DC51214-1
891-00309	Hood, 25 Pin Connector	
700-00118	Cannon DB51221-1 Slidelock, 25 Pin Conn.	
401-41805	Extender Card Assembly	(Optional)
401-41893	Extender Card High Voltage	(Optional)
146-41942	Assembly, Keyboard	(Optional) Prod Ref

ASSEMBLY NO. 693-41884

DESCRIPTION PROGRAM LINES TERMINATOR

ASSEMBLY OR PART NO.	DESCRIPTION	SCHEMATIC REF.
140-27178	Schematic Line Terminator	Prod. Ref
700-00304	Connector, 25pin male DBM-25P	P103
891-00309	Connector Hood	
700-00338	Slide Lock Retainer	
595-00681	Resistor, 680Ω 1/4W, 5%	R1-10
595-00122	Resistor, 1.2K 1/4W, 5%	R11-20

ASSEMBLY NO. 825-41867

DESCRIPTION COMPLETION MATERIALS

ASSEMBLY OR PART NO.	DESCRIPTION	SCHEMATIC REF.
259-41885	Cover Assembly, Top	
258-41849	Cover, Bottom	
500-41871	Insulator, Bottom Cover G-10	
276-41807	Graticule	
275-41516	Filter, Polariod	
276-41290	Bezel	
240-41199	Nut, Bezel	
704-41955	Assy, Cable Coax	
704-41956	Assy, Cable Coax	
704-41957	Assy, Cable Coax	
704-41958	Assy, Cable Coax	
	Chassis Slide (2)	(Optional) Prod Ref
704-41959	Assy, Cable Coax	
704-41960	Assy, Cable Coax	
704-41961	Assy, Cable Coax	

ASSEMBLY NO. 401-41805

DESCRIPTION EXTENDER CARD-DUAL 72 PIN

ASSEMBLY OR PART NO.	DESCRIPTION	SCHEMATIC REF.
400-41804	PCB, Extender Bd	
743-00026	Connector 72 Pin Amphenol 225-23622-101	

ASSEMBLY NO. 259-41885

DESCRIPTION COVER ASSEMBLY, TOP

ASSEMBLY OR PART NO.	DESCRIPTION	SCHEMATIC REF.
258-41889	Cover, Top	
262-41872	Bracket, Card Holder	
	-HARDWARE-	
	FHS Phil Screw #6-32x5/8 Lg (4)	Prod Ref
	Nut, Lock #6-32 (4)	Prod Ref

ASSEMBLY NO. 704-41966

DESCRIPTION COAX CABLE ASSEMBLY

ASSEMBLY OR PART NO.	DESCRIPTION	SCHEMATIC REF.
704-41966	Assembly Drawing	Prod Ref
721-00308	Connector, Coaxial	
793-00319	Shrink Tube, Black 3/32Dia	
776-00301	Cable Coaxial RG188 23"	

ASSEMBLY NO. 704-41964

DESCRIPTION COAX CABLE ASSEMBLY

ASSEMBLY OR PART NO.	DESCRIPTION	SCHEMATIC REF.
704-41964	Assembly Drawing	Prod Ref
721-00308	Connector, Coaxial	
793-00319	Shrink Tube, Black 3/32Dia	
776-00301	Cable, Coaxial RG188 19.5"	

ASSEMBLY NO. 704-41962

DESCRIPTION COAX CABLE ASSEMBLY

ASSEMBLY OR PART NO.	DESCRIPTION	SCHEMATIC REF.
704-41962	Assembly Drawing	Prod Ref
721-00308	Connector, Coaxial	
793-00319	Shrink Tube, Black 3/32Dia	
776-00301	Cable, Coaxial RG188 13.5"	

ASSEMBLY NO. 704-41963

DESCRIPTION COAX CABLE ASSEMBLY

ASSEMBLY OR PART NO.	DESCRIPTION	SCHEMATIC REF.
704-41963	Assembly Drawing	Prod Ref
721-00308	Connector, Coaxial	
793-00319	Shrink Tube, Black 3/32Dia	
776-00301	Cable, Coaxial RG188 17"	

ASSEMBLY NO. 704-41956

DESCRIPTION COAX CABLE ASSEMBLY

ASSEMBLY OR PART NO.	DESCRIPTION	SCHEMATIC REF.
704-41956	Assembly Drawing	Prod Ref
721-00308	Connector, Coaxial Con-Hex	
793-00319	Shrink Tube, Black 3/32Dia	
776-00301	Cable, Coaxial RG188A/U 13"	

ASSEMBLY NO. 704-41955

DESCRIPTION ASSEMBLY, CABLE COAX

ASSEMBLY OR PART NO.	DESCRIPTION	SCHEMATIC REF.
704-41955	Assembly Drawing	Prod Ref
721-00308	Connector, Coaxial	
776-00301	Cable, Coaxial RG188A/U 10"	
793-00319	Shrink Bube, Black 3/32 Dia	

ASSEMBLY NO. 704-41965

DESCRIPTION COAX CABLE ASSEMBLY

ASSEMBLY OR PART NO.	DESCRIPTION	SCHEMATIC REF.
704-41965	Assembly Drawing	Prod Ref
721-00308	Connector, Coaxial	
793-00319	Shrink Tube, Black 3/32Dia	
776-00301	Cable, Coaxial RG188 21"	

ASSEMBLY NO. 704-41961

DESCRIPTION COAX CABLE ASSEMBLY

ASSEMBLY OR PART NO.	DESCRIPTION	SCHEMATIC REF.
704-41961	Assembly Drawing	Prod Ref
721-00308	Connector, Coaxial	
793-00319	Shrink Tube, Black 3/32Dia	
776-00301	Cable, Coaxial RG188 24"	

ASSEMBLY NO 704-41960

DESCRIPTION COAX CABLE ASSEMBLY

ASSEMBLY OR PART NO.	DESCRIPTION	SCHEMATIC REF.
704-41960	Assembly Drawing	Prod Ref
721-00308	Connector, Coaxial	
793-00319	Shrink Tube, Black 3/32Dia	
776-00301	Cable, Coaxial RG188 21"	

ASSEMBLY NO 704-41959

DESCRIPTION COAX CABLE ASSEMBLE

ASSEMBLY OR PART NO.	DESCRIPTION	SCHEMATIC REF.
704-41959	Assembly Drawing	Prod Ref
721-00308	Connector, Coaxial	
793-00319	Shrink Tube, Black 3/32Dia	
776-00301	Cable, Coaxial RG188 19"	

ASSEMBLY NO 704-41958

DESCRIPTION COAX CABLE ASSEMBLY

ASSEMBLY OR PART NO.	DESCRIPTION	SCHEMATIC REF.
704-41958	Assembly Drawing	Prod Ref
721-00308	Connector, Coaxial	
793-00319	Shrink Tube, Black 3/32Dia	
776-00301	Cable, Coaxial RG188 17"	

ASSEMBLY NO. 704-41957

DESCRIPTION COAX CABLE ASSEMBLY

ASSEMBLY OR PART NO.	DESCRIPTION	SCHEMATIC REF.
704-41957	Assembly Drawing	Prod Ref
721-00308	Connector, Coaxial	
793-00319	Shrink Tube, Black 3/32Dia	
776-00301	Cable, Coaxial RG188A/U 15.5"	

ASSEMBLY NO. 651-41886

DESCRIPTION ASSEMBLY, TRANSFORMER DUAL TOROIDAL

ASSEMBLY OR PART NO.	DESCRIPTION	SCHEMATIC REF.
651-41886	Assembly Drawing	Prod Ref
361-00306	Bead, Toroid 1041T060/3E2A	
761-00300	Wire, Bi-filar	

ASSEMBLY NO. 651-41970

DESCRIPTION ASSEMBLY, TRANSFORMER DUAL TOROIDAL

ASSEMBLY OR PART NO.	DESCRIPTION	SCHEMATIC REF.
651-41970	Assembly Drawing	Prod Ref
361-00306	Bead, Toroid 1041T060/3E2A	
761-00300	Wire, Bi-Filar	

ASSEMBLY NO. 335-41696

DESCRIPTION COIL CRT TRACE ALIGNMENT

ASSEMBLY OR PART NO.	DESCRIPTION	SCHEMATIC REF.
335-41696	Assembly Drawing	Prod Ref
	VENDOR: TURBO - JET	
	P/N TBJ439	

ASSEMBLY NO. 401-41893

DESCRIPTION EXTENDER CARD HIGH VOLTAGE

ASSEMBLY OR PART NO.	DESCRIPTION	SCHEMATIC REF.
400-41804	PC Board	
743-	225-23622-101 Connector, 72 Pin Amphenol	
500-41892	Insulator, G10 H.V.	
	Screw, B.H.Phil #6-32x⅜(4)	Prod Ref
	Nut, Small #6-32 (8)	Prod Ref

ASSEMBLY NO. 706-42028

DESCRIPTION ASSEMBLY, CABLE BCD OUTPUT

ASSEMBLY OR PART NO.	DESCRIPTION	SCHEMATIC REF.
400-42025	PC Board	
700-00022	#57-40240 Connector, 24 Pin Amphenol	
700-00024	#57-30240 Connector, 24 Pin Amphenol	
700-00129	3M 3399-1 Connector, Transition 26 PIN	
700-00148	3M 3434-0000 Connector, Transition 26 Pin	
757-00003	Cable, Flat Ribbon 26 Strand	
706-42028	Assembly Drawing	Prod Ref

ASSEMBLY NO. 702-41878

DESCRIPTION HIGH VOLTAGE HARNESS ASSEMBLY

ASSEMBLY OR PART NO.	DESCRIPTION	SCHEMATIC REF.
702-41878	Assembly Drawing	Prod Ref
702-41879	Wire List	Prod Ref
495-00062	Socket, CRT Cinch 3M-14	(V1)
700-00090	Connector, Cambion Pin 3308-103	
700-00313	Connector, H.V CRT	

ASSEMBLY NO. AMC 941

DESCRIPTION REMOTE SAMPLING UNIT, PROBE

ASSEMBLY OR PART NO.	DESCRIPTION	SCHEMATIC REF.
402-41899	Probe Board Assembly	
706-41932	Cable Assembly	
891-41967	Case Assembly	
350-21274	941 Probe Accessory Kit	(Optional)

ASSEMBLY NO. 402-41899

DESCRIPTION PROBE BOARD ASSEMBLY

ASSEMBLY OR PART NO.	DESCRIPTION	SCHEMATIC REF.
400-41897	PC Board	
402-41899	Assembly Drawing	Prod Ref
140-41898	Schematic	Prod Ref
402-41917	Diode Bridge Bd Assy	
311-00087	Cap, 10pf	C4
311-00091	Cap, 100pf	C2,3
318-00306	Cap, 1μf 50V	C5,6,7
594-00101	Resistor 100Ω 1/8W 5%	R4,9,16,19
594-00103	Resistor 10K 1/8W 5%	R15,18
594-00104	Resistor 100K 1/8W 5%	R5
594-00203	Resistor 20K 1/8W 5%	R17
594-00242	Resistor 2.4K 1/8W 5%	R6
594-00274	Resistor 270K 1/8W 5%	R8
594-00301	Resistor 300Ω 1/8W 5%	R1,2
594-00682	Resistor 6.8K 1/8W 5%	R7
594-00039	Resistor 3.9Ω 1/8W 5%	R3
620-00045	Resistor 4.75K 1/8W 1% MF	R11,14
*651-41570	Transformer Assembly	T1

ASSEMBLY NO. 402-41899

DESCRIPTION PROBE BOARD ASSEMBLY

ITEM	ASSEMBLY OR PART NO.	DESCRIPTION	SCHEMATIC REF.
A	663-00321	Transistor 2N3819	Q1
B	9663-00700	Transistor MPS 3904	Q4
C	9663-00701	Transistor MPS 3906	Q2,3
D			
E			
F			
G	551-00065	Potentiometer 500Ω A/B SV5011	R10
H	551-00077	Potentiometer 10K A/B SV1031	R12,13

ASSEMBLY NO. 402-41917

DESCRIPTION DIODE BRIDGE BOARD ASSEMBLY

ASSEMBLY OR PART NO.	DESCRIPTION	SCHEMATIC REF.
400-41915	PC Board	
402-41917	Assembly Drawing	Prod Ref
140-41898	Schematic	Prod Ref
266-41259	Probe Tip	
311-00087	Cap, 10pf	C1
376-00304	Diode, Matched Quad	CR1-4
651-41969	Transformer Assembly	T2
758-00004	Wire, Buss Tinned 22AWG	Prod Ref

ASSEMBLY NO. 706-41932

DESCRIPTION CABLE ASSEMBLY

ASSEMBLY OR PART NO.	DESCRIPTION	SCHEMATIC REF.
704-41169	Cable 10 Cond 1 Coax	Prod Ref
704-41660	Cable Spec	Prod Ref
272-41826	Ring, Compression Delrin	
410-41825	Clamp, Cable	
146-41552	Ferrule, Gold Plated	
700-00310	Connector, Amphenol 165-9	
406-00024	Solder Sleeve	
278-41922	Block, Cable End	
215-41737	Washer, Clamping	
272-41745	Ring, Compression	

ASSEMBLY NO. 891-41967

DESCRIPTION CASE ASSEMBLY

ASSEMBLY OR PART NO.	DESCRIPTION	SCHEMATIC REF.
278-41921	Block, Probe End	
258-41910	Cover, Top	
258-41911	Cover, Bottom	
475-41506	Insulator, Micarta Bead	
694-41923	Connector, Extension	
	-HARDWARE-	
202-00054	Screw, #4-40x¼ BHMS (4)	Prod Ref
202-00011	Screw #4-40x¼ 100° FHMS(8)	Prod Ref
	Set Screw, #4-40X¼ Allen Hd. (1)	Prod Ref
	Tag, Serial Number (1)	Prod Ref

ASSEMBLY NO. 942

DESCRIPTION REMOTE SAMPLING UNIT

ASSEMBLY OR PART NO.	DESCRIPTION	SCHEMATIC REF.
891-42017	Case Assembly	
146-41857	Outline Drawing	Prod Ref
706-41968	Cable Assembly	

ASSEMBLY NO. 891-42017

DESCRIPTION RSU 942 CASE ASSEMBLY

ASSEMBLY OR PART NO.	DESCRIPTION	SCHEMATIC REF.
*402-41980	PC Bd. Probe 942	
278-42037	Block Conn. End BNC	
706-41968	Cable, Assy, 10'	
258-41984	Cover, Top	
258-41985	Cover, Bottom	
721-00013	Connector, BNC	
202-00054	Screw 4-40x¼ BHMS (4)	Prod Ref
202-00011	Screw 4-40x¼ 100° FHMS (8)	Prod Ref
694-00003	Adaptor, GR-BNC (Optional)	

ASSEMBLY NO. 402-41980

DESCRIPTION REMOTE SAMPLING UNIT BOARD ASSEMBLY

ASSEMBLY OR PART NO.	DESCRIPTION	SCHEMATIC REF.
400-41978	PC Board	
402-41980	Assembly Drawing	Prod Ref
140-41979	Schematic	Prod Ref
311-00087	VIT Axial Cap, 10pf VK27BW100K	C6,9,12, 17
311-00094	Vit Radial Cap, 1000pf VK23BW102M	C13
311-00100	Vit Axial Cap, 100pf VK27BW101K	C4,5,10,11, 15,16
311-00105	Cap, 1pf 300V 5% Mica	C3
311-00106	Cap, 7pf 300V 5% Mica	C8
311-00337	Cap, 2pf 300V 5% Mica	C2
318-00306	Cap, Tant 1µf 50V	C18-20
332-00010	Cap, 2.5-9pf Variable	C1,7
376-00022	Diode, 1N4448	CR16-20,22
376-42057	Diode, HPA2810	CR13-15
376-42058	Diode, HPA2810 MatchedQuad	CR1-4,5-8 9-12
551-00065	Potentiometer 500Ω A/B	R73
551-00077	Potentiometer 10K A/B	R31,33,38 40,47.
551-	3262W-1-103 Potentiometer 10K Bourns	R45

ASSEMBLY NO. 402-41980

DESCRIPTION REMOTE SAMPLING UNIT BOARD ASSEMBLY

ASSEMBLY OR PART NO.	DESCRIPTION	SCHEMATIC REF.
584-00045	Relay DPDT 18V 712-18	K1,2
594-00039	Resistor 3.9Ω 1/8W 5%	R27
594-00101	Resistor 100Ω 1/8W 5%	R21,28
594-00103	Resistor 10K 1/8W 5%	R14,30,35, 37,42,44, 49,60,61, 62,69
594-00104	Resistor 100K 1/8W 5%	R19
594-00105	Resistor 1M 1/8W 5%	R16
594-00114	Resistor 110K 1/8W 5%	R15
594-00133	Resistor 13K 1/8W 5%	R77
594-00153	Resistor 15K 1/8W 5%	R71
594-00202	Resistor 2K 1/8W 5%	R65,70,78
594-00203	Resistor 20K 1/8W 5%	R32,39,46
594-00240	Resistor 24Ω 1/8W 5%	R76
594-00242	Resistor 2.4K 1/8W 5%	R23
594-00274	Resistor 270K 1/8W 5%	R20
594-00301	Resistor 300Ω 1/8W 5%	R5,6,11,12, 17,18
594-00302	Resistor 3K 1/8W 5%	R54
594-00303	Resistor 30K 1/8W 5%	R53,58,64, 68
594-00330	Resistor 33Ω 1/8W 5%	R13,50,52, 72,75

ASSEMBLY NO. 402-41980

DESCRIPTION REMOTE SAMPLING UNIT BOARD ASSEMBLY

ASSEMBLY OR PART NO.	DESCRIPTION	SCHEMATIC REF.
594-00393	Resistor 39K 1/8W 5%	R55
594-00512	Resistor 5.1K 1/8W 5%	R56,59,66
594-00682	Resistor 6.8K 1/8W 5%	R22
594-00751	Resistor 750Ω 1/8W 5%	R24-26
594-00820	Resistor 82Ω 1/8W 5%	R1,7
594-00913	Resistor 91K 1/8W 5%	R57,63,67
595-00202	Resistor 2K ¼W 5%	R79,80
601-00305	Pyrofilm Resistor 1.98M 1/8W.5%	R2
601-00306	Pyrofilm Resistor 200K 1/20W.5%	R10
601-00307	Pyrofilm Resistor 20K 1/20W.5%	R4
601-00308	Pyrofilm Resistor 1.80M 1/8W .5%	R8
616-00320	Resistor 2K 1/8W 1% MF	R74
616-00364	Tin Oxide C3 Resistor 51Ω 1/8W 5%	R3,9
620-00045	Resistor 4.75K 1/8W 1%	R29,34,36, 41,43,48
*651-41570	Transformer 6T Toroid	T2,4,6
*651-41969	Transformer 4-T Toroid	T1,3,5

ASSEMBLY NO. 402-41980

DESCRIPTION REMOTE SAMPLING UNIT BOARD ASSEMBLY

ASSEMBLY OR PART NO.	DESCRIPTION	SCHEMATIC REF.
663-00070	Transistor 2N3904	Q6,10,12, 14
663-00071	Transistor 2N3906	Q2-5,7-9, 11,13,16
663-42056	Transistor 2N3819 10MA	Q1
663-00321	Transistor 2N3819	Q15

ASSEMBLY NO. 706-41968

DESCRIPTION CABLE ASSEMBLY 10'

ASSEMBLY OR PART NO.	DESCRIPTION	SCHEMATIC REF.
706-41968	Assembly Drawing	Prod Ref
278-41982	Block Cable End	
704-41169	Cable, 10 Conductor, 1 Coax (122")	
410-41825	Clamp, Cable	
272-41826	Ring, Compression	
146-41552	Ferrule, Shield Retaining	
272-41745	Ring, Compression	
215-41737	Washer, Clamping	
700-00310	Connector, Amphenol 165-9	
793-00301	Tubing, TFE	
758-00301	Wire, Bare Buss, 22AWG	

ASSEMBLY NO. 251-41924

DESCRIPTION FRONT PANEL ASSEMBLY

ASSEMBLY OR PART NO.	DESCRIPTION	SCHEMATIC REF.
250-41900	Panel, Front	
425-41905	Handle, Cast Alum	
443-00039	Knob, Instrument	
630-00304	Switch, Power	S201
625-41988	Switch, Assy (Probe No.)	S202
	Lamp, Pwr Switch	S201,DS1
706-41990	Assy, Cable/Conn (Probe)	J 00-19
706-41991	Assy, Cable (26 Wire Flat)	X1 ATT
706-41992	Assy, Cable(26Wire Flat)	X10 Att
706-41993	Assy, Cable(26 Wire Flat)	Chop
	Brady Markers MM-0-49	Prod Ref
702-41994	Wire List, Front Panel	Prod Ref
595-00273	Resistor 27K ¼W 5%	R216
	-HARDWARE-	
205-00302	Screw, #10-32x3/4 BHMS(4)	Prod Ref
202-00006	Screw, #4-40x¼ BHMS (80)	Prod Ref

ASSEMBLY NO. 625-41988

DESCRIPTION SWITCH ASSEMBLY (PROBE NO.)

ASSEMBLY OR PART NO.	DESCRIPTION	SCHEMATIC REF.
	Switch, Oak Moduline	
	#02,052,05,05,1,00,3,202	S202
706-41989	Cable Assy, 26 Wire Flat 28¼"	

ASSEMBLY NO. 706-41989

DESCRIPTION CABLE ASSEMBLY, 26-WIRE (PROBE NO.)

ASSEMBLY OR PART NO.	DESCRIPTION	SCHEMATIC REF.
	Connector, 26 Pin 3M #3399-0000	
	Cable, 26 Wire Flat Ribbon	
	28¼", 28GA Strand, 3M #3365	Prod Ref

ASSEMBLY NO. 706-41990

DESCRIPTION CABLE/CONNECTOR ASSEMBLY (PROBE)

ASSEMBLY OR PART NO.	DESCRIPTION	SCHEMATIC REF.
700-00309	Connector, Bulkhead	
	Amphenol 12 Pin #165-12	
704-41999	Assy, Coax Cable (Sig) 19½	
704-42005	Assy, Coax Cable (Strobe)	
060-42016	Tooling Fixture For	
	704-42005	Prod Ref

ASSEMBLY NO. 704-42005

DESCRIPTION COAX CABLE ASSEMBLY (STROBE)

ASSEMBLY OR PART NO.	DESCRIPTION	SCHEMATIC REF.
	Connector, ST Cable Term	
	Con Hex 51-024-0000	
776-00301	Cable, RG188A/U Coax 15½"	Prod Ref

ASSEMBLY NO. 706-41991

DESCRIPTION CABLE ASSEMBLY, 26 WIRE FLAT(X1 ATT)

ASSEMBLY OR PART NO.	DESCRIPTION	SCHEMATIC REF.
	#3399-0000 Connector, 26 Pin 3M	
	26" Cable, 26 Wire Flat Ribbon	
	28GA Strand, 3M #3365	Prod Ref

ASSEMBLY NO. 706-41992

DESCRIPTION CABLE ASSEMBLY, 26 WIRE FLAT(X10 ATT)

ASSEMBLY OR PART NO.	DESCRIPTION	SCHEMATIC REF.
	#3399-0000 Connector, 26 Pin, 3M	
	28½" Cable, 26 Wire Flat Ribbon	
	28GA Strand, 3M #3365	Prod Ref

ASSEMBLY NO. 706-41993

DESCRIPTION CABLE ASSEMBLY, 26 WIRE FLAT(CHOP)

ASSEMBLY OR PART NO.	DESCRIPTION	SCHEMATIC REF.
	#3399-0000 Connector, 26 Pin 3M	
	24" Cable, 26 Wire Flt Ribbon	
	28GA Strand, 3M #3365	Prod Ref

ASSEMBLY NO. 253-41925

DESCRIPTION REAR PANEL ASSEMBLY

ASSEMBLY OR PART NO.	DESCRIPTION	SCHEMATIC REF.
252-41901	Panel, Rear	
144-41912	Silkscreen, Rear Panel	Prod Ref
	Filter, RFI/AC Pwr Jack	
	Com Corp 2B-4-7106	J101
396-00001	Fuse Holder	F101
398-00017	Fuse, 3/4 A S.B.	F101
700-00306	Conn, 37 Pin DCM-37S	J102,103
700-00337	Post, Slide-Lock	J102,103
704-41995	Cable Assy, Trig. Input	J104
702-42012	Wire List, Rear Panel	Prod Ref
276-00300	Tab, Serial No.	
704-41996	Coax Cable Assy, BFB (16 3/4")	A3(J44)
704-41997	Assy, AFB Coax Cable (18")	A3(J43)
704-41998	Assy, AES Coax Cable(18½")	A3(J42)
704-41999	Assy, BES Coax Cable (19 3/4")	A3(J41)
704-42000	Assy, Cable 26 Wire(Prog)	(A1-J1)
	-HARDWARE-	
203-00303	Screw, 6-32x3/8 BHMS (PH) (8)	Prod Ref
240-00002	Keepnut, 6-32x¼ (6)	Prod Ref

ASSEMBLY NO. 704-41995

DESCRIPTION TRIG. INPUT CABLE ASSEMBLY (J104)

ASSEMBLY OR PART NO.	DESCRIPTION	SCHEMATIC REF.
	Connector, ST. Cable Term	
	Con-Hex 51-024-0000	
721-00082	For RG174 Connector, BNC Bulkhd Term	
776-00002	Cable, RG174 Coax 23"	Prod Ref

ASSEMBLY NO. 704-41996

DESCRIPTION BFB COAX CABLE ASSEMBLY

ASSEMBLY OR PART NO.	DESCRIPTION	SCHEMATIC REF.
	Connector, ST Cable Term	
	Con-Hex 51-024-0000	
776-00002	Cable, RG174A/U Coax 16 3/4"	Prod Ref

ASSEMBLY NO. 704-41997

DESCRIPTION AFB COAX CABLE ASSEMBLY

ASSEMBLY OR PART NO.	DESCRIPTION	SCHEMATIC REF.
	Connector, St. Cable Term	
	Con Hex 51-024-0000	
776-00002	Cable, RG174A/U Coax 18"	Prod Ref

ASSEMBLY NO. 704-41998

DESCRIPTION AES COAX CABLE ASSEMBLY

ASSEMBLY OR PART NO.	DESCRIPTION	SCHEMATIC REF.
	Connector, ST Cable Term	
	Con Hex 51-024-0000	
776-00002	Cable, RG174A/U Coax 18½"	Prod Ref

ASSEMBLY NO. 704-41999

DESCRIPTION BES COAX CABLE ASSEMBLY

ASSEMBLY OR PART NO.	DESCRIPTION	SCHEMATIC REF.
	Connector, ST Cable Term	
	Con Hex 51-024-0000	
776-00002	Cable, RG174A/U Coax 20¼"	Prod Ref

ASSEMBLY NO. 706-42000

DESCRIPTION CABLE, 26 WIRE ASSEMBLY (PROG)

ASSEMBLY OR PART NO.	DESCRIPTION	SCHEMATIC REF.
	3M #3399-0000 Connector, 26 Pin (Prog)	
	Cable, 26 Wire Flat, 28GA	
	Strand, 3M #3365 4 3/4"	Prod Ref

ASSEMBLY NO. 255-41926

DESCRIPTION CHASSIS ASSEMBLY

ASSEMBLY OR PART NO.	DESCRIPTION	SCHEMATIC REF.
254-41906	Chassis	
144-41986	Silkscreen, Chassis	Prod Ref
316-00003	Cap, 4000µf 15V	C302
	Sprague 36D132G050AA2A Cap, 1300µf 50V	C303,304 305
316-00085	Cap, E1, 20-20µf 250V	C301
610-00126	Resistor .33Ω 2W 5% w.w.	R301
610-00011	Resistor 1Ω 5W 3% w.w.	R302
610-00042	Resistor 200Ω 3W 5% w.w.	R303
484-00006	Standoff, Alac 408	
650-19612	Transformer, Power Tranex 4-1348	T301
663-00120	Transistor 2N4911	Q302,303 304
663-00334	Transistor 2N4898	Q305
663-00342	Transistor MO MJ400	Q301
490-00038	Transistor Mtg Kit MO MK-25	
484-00036	Terminal Block, (6 wire)	
484-00037	Marker Strip	
484-00027	Terminal Lug	
484-00023	Jumper	
258-13061	Cover, AC	

ASSEMBLY NO. 255-41926

DESCRIPTION CHASSIS ASSEMBLY

ASSEMBLY OR PART NO.	DESCRIPTION	SCHEMATIC REF.
743-00011	Socket, PCB, Dual 22 Pin	
706-42001	Assy, 14 Wire Flat Cable	(A1-J8)
420-00012	Caterpillar 8"	Prod Ref
262-42041	Bracket, Conn. Mtg	
706-42008	Assy, 26 Wire Cable	(Strobe)
706-42009	Assy, 26 Wire Cable	(Relay)
702-42010	Harness, L.V.	
702-42011	Wire List for 702-42010	Prod Ref
	-HARDWARE-	
500-00006	Insulator, Cap (1)	Prod Ref
500-00007	Insulator, Cap (1)	Prod Ref
460-00302	Solder Lug #10 Lock. (6)	Prod Ref
460-00001	Solder Lug, #6 Plain (2)	Prod Ref
405-00306	Clamp, Cap Mallory VR-3	
475-00003	Spacer Th'd, 6-32x3/8(13)	Prod Ref
200-00006	Screw, 2-56x¼ BHMS Slot(2)	Prod Ref
215-00044	Lockwasher, #2 Split (2)	Prod Ref
202-00002	Screw, 4-40x1/8 BHMS (2)	Prod Ref
202-00019	Screw, 4-40x½ BHMS (4)	Prod Ref

ASSEMBLY NO. 255-41926

DESCRIPTION CHASSIS ASSEMBLY

ASSEMBLY OR PART NO.	DESCRIPTION	SCHEMATIC REF.
203-00005	Screw, 6-32x¼ BHMS (26)	Prod Ref
203-00302	Screw, 6-32x3/8 SS (PH) BHMS (10)	ProdRef
203-00303	Screw, 6-32x½ SS (PH) BHMS (4)	Prod Ref
475-00025	Spacer, Hex TH'D 4-40-¼ (2)	Prod Ref
240-00001	Keepnut 4-40x¼ Cd Pl (2)	Prod Ref
240-00002	Keepnut, 6-32x5/16 Cd Pl(16)	Prod Ref
215-00023	Washer, #4 Flat (4)	ProdRef
240-00300	Nut, 2-56x3/16 MS (2)	Prod Ref
	6-32 TRIR Standoff 3/8 L x¼ OD (2)	Prod Ref

ASSEMBLY NO. 706-42001

DESCRIPTION 14 WIRE FLAT CABLE ASSEMBLY

ASSEMBLY OR PART NO.	DESCRIPTION	SCHEMATIC REF.
	3M #3406-0000 Connector, 14 Pin DIP	
	Cable, Ribbon 14 wire	
	(Tear From 3M #3365) 4½"	Prod Ref

ASSEMBLY NO. 706-42008

DESCRIPTION 26 WIRE FLAT CABLE ASSEMBLY (STROBE BD)

ASSEMBLY OR PART NO.	DESCRIPTION	SCHEMATIC REF.
	#3399-0000 Connector 26 Pin 3M	
	Cable, 26 Wire Flat, 28GA	
	Stranded, 3M #3365 8½"	Prod Ref

ASSEMBLY NO. 706-42009

DESCRIPTION 26 WIRE FLAT CABLE ASSEMBLY (RELAY BD)

ASSEMBLY OR PART NO.	DESCRIPTION	SCHEMATIC REF.
	#3399-0000 Connector, 26 Pin, 3M	
	Cable, 26 Wire Flat, 28GA	
	stranded, 3M #3365 12½"	Prod Ref

ASSEMBLY NO. 257-41927

DESCRIPTION SIDE PANEL ASSEMBLY

ASSEMBLY OR PART NO.	DESCRIPTION	SCHEMATIC REF.
256-41913	Panel, Side L. H.	
256-41914	Panel, Side R.H.	
256-41848	Gusset	
	-HARDWARE-	
203-00010	Screw, 6-32x3/8 100° FHMS (16)	Prod Ref
203-00302	Screw, 6-32x3/8 BHMS (16)	Prod Ref
240-00002	Keepnut, 6-32x¼ (16)	Prod Ref

ASSEMBLY NO. 402-41920

DESCRIPTION DECODING LOGIC BOARD ASSEMBLY

ASSEMBLY OR PART NO.	DESCRIPTION	SCHEMATIC REF.
400-41918	PC Board	
402-41920	Assembly Drawing	Prod Ref
140-41919	Schematic	Prod Ref
318-00308	Cap, Tant, 4.7µf 35V	C1
495-00040	Socket, IC 14 Pin	IC1-5,10-12 15-32,43,
		49, J8
495-00054	Socket, IC 16 Pin	IC 6-9,13, 14,33-42
		44-48
	IC MC 3022P	IC 11,26
665-00024	IC MC 7400	IC 12
665-00050	IC MC 7402	IC 1-5, 15-24
	IC MC 7404	IC 10,27-32 43,49
	IC MC 7420	IC 25
	IC MC 7442	IC 6,9,13, 14
	IC MC 74145	IC 7,8
	IC N8235B	IC 33-42, 44-48
	3M 26 Pin Connector Header #3429-2002	(J1-7)

ASSEMBLY NO. 402-41904

DESCRIPTION STROBE SWITCH BOARD ASSEMBLY

ASSEMBLY OR PART NO.	DESCRIPTION	SCHEMATIC REF.
400-41902	PC Board	
402-41904	Assembly Drawing	Prod Ref
140-41903	Schematic	Prod Ref
	Cap, 100pf Vitr Axial VK27BW101K	C1-22,25
	Cap, 220pf Vitr Axial VK27BW221K	C26
318-00306	Cap, Tant, 1µf 50V	C23,24
335-41281	Toroid Coil Assy, 3 Turn	L1-20
376-00022	Diode, 1N4448	CR26
376-00081	Diode MA4B200	CR24
376-00302	Diode HPA 2900	CR25
376-00304	Diode HPA 2900 Quad	CR1-20
595-00101	Resistor 100Ω ¼W 5%	R90
595-00102	Resistor 1K ¼W 5%	R85,89
595-00301	Resistor 300Ω ¼W 5%	R21-40
595-00303	Resistor 30K ¼W 5%	R41-60
595-00392	Resistor 3.9K ¼W 5%	R84
595-00393	Resistor 39K ¼W 5%	R86
595-00510	Resistor 51Ω ¼W 5%	R81

ASSEMBLY NO. 402-41904

DESCRIPTION STROBE SWITCH BOARD ASSEMBLY

ASSEMBLY OR PART NO.	DESCRIPTION	SCHEMATIC REF.
595-00511	Resistor 510Ω ¼W 5%	R61-80
595-00621	Resistor 620Ω ¼W 5%	R83
595-00751	Resistor 750Ω ¼W 5%	R87
595-00913	Resistor 91K ¼W 5%	R1-20
610-00119	Resistor 500Ω 3W w.w.	R82
651- 42042	Transformer Assy	T1
663-00319	Transistor 2N3646	Q21-23
9663-00701	Transistor MPS 3906	Q1-20
9663-00700	Transistor MPS 3904	Q24
	3M 26 Pin Connector Header #3429-2002	J22
704-41949	Cable Assy, Strobe Charge	J20
721-00035	Coax Connector, Phelps-Dodge	J 00-21

ASSEMBLY NO. 704-41949

DESCRIPTION COAX CABLE ASSEMBLY, STROBE CHARGE LINE

ASSEMBLY OR PART NO.	DESCRIPTION	SCHEMATIC REF.
704-41949	Assembly Drawing	Prod Ref
	Connector, 51-024-0000	
776-00301	Cable, Coaxial RG188A/U	
793-00319	Shrink Tube, Black 3/32Dia	

ASSEMBLY NO. 402-41909

DESCRIPTION RELAY MULTIPLEXER BOARD ASSEMBLY

ASSEMBLY OR PART NO.	DESCRIPTION	SCHEMATIC REF.
400-41907	PC Board	
402-41909	Assembly Drawing	Prod Ref
140-41908	Schematic	Prod Ref
376-00022	Diode, 1N4448	CR1-80
595-00103	Resistor 10K ½W 5%	R2,5,8,11
595-00203	Resistor 20K ½W 5%	R3,6,9,12
595-00302	Resistor 3K ½W 5%	R1,4,7,10
9663-00700	Transistor MPS 3904	Q1,3,5,7
9663-00701	Transistor MPS 3906	Q2,4,6,8
	Relay, Frost #36182A012	K1-40
700-00301	Berg Pac, 4 Pin #4560	K1-40
721-00035	Phelps Dodge Connector, Coax	J1-44
	3M 26 Pin Connector Header #3429-2002	(J45)

ASSEMBLY NO 402-41936

DESCRIPTION LOW VOLTAGE POWER SUPPLY BOARD ASSY

ASSEMBLY OR PART NO.	DESCRIPTION	SCHEMATIC REF.
400-41934	PC Board	
402-41936	Assembly Drawing	Prod Ref
140-41935	Schematic	Prod Ref
311-00063	Cap, Cerm 220pf	C10
311-00305	Cap, .001µf 200V	C5
311-00325	Cap, .033µf 200V	C4,8
311-00328	Cap, .047µf 200V	C3
316-00035	Cap, El, 100µf 25V	C11
316-00085	Cap, El, 20-20µf 250V	C2
316-00310	Cap, El, 8µf 50V	C1
318-00035	Cap, Tant 18µf 35V	C9,12
318-00306	Cap, Tant 1µf 50V	C13
318-00308	Cap, Tant 4.7µf 35V	C6,7,15,16
320-00302	Cap, .22µf/200V	C17
374-00063	Diode, 1N969B	CR3
374-00079	Diode, 1N5244B	CR4
376-00022	Diode, 1N4448	CR8
376-00034	Diode, 1N4005	CR2,6
376-00310	Diode, Bridge Varo VS647	CR1,5,7

ASSEMBLY NO. 402-41936

DESCRIPTION LOW VOLTAGE POWER SUPPLY BOARD ASSY

ASSEMBLY OR PART NO.	DESCRIPTION	SCHEMATIC REF.
551-00057	Potentiometer 2K	R11
595-00105	Resistor 1M ¼W 5%	R5
595-00185	Resistor 1.8M ¼W 5%	R7
595-00203	Resistor 20K ¼W 5%	R40,41
595-00241	Resistor 240Ω ¼W 5%	R6
595-00244	Resistor 240K ¼W 5%	R28
595-00274	Resistor 270K ¼W 5%	R19
595-00303	Resistor 30K ¼W 5%	R15
595-00392	Resistor 3.9K ¼W 5%	R33
595-00393	Resistor 39K ¼W 5%	R13
595-00472	Resistor 4.7K ¼W 5%	R2,8,20,16 24,36,42
595-00512	Resistor 5.1K ¼W 5%	R30
595-00513	Resistor 51K ¼W 5%	R35
595-00564	Resistor 560K ¼W 5%	R17
595-00753	Resistor 75K ¼W 5%	R29
595-00823	Resistor 82K ¼W 5%	R3
596-00134	Resistor 130K ⅓W 5%	R14
596-00154	Resistor 150K ⅓W 5%	R18
596-00184	Resistor 180K ⅓W 5%	R4
596-00300	Resistor 30Ω ⅓W 5%	R1

ASSEMBLY NO. 402-41936

DESCRIPTION LOW VOLTAGE POWER SUPPLY BOARD ASSY

ASSEMBLY OR PART NO.	DESCRIPTION	SCHEMATIC REF.
596-00150	Resistor 15Ω ½W 5%	R9
596-00200	Resistor 20Ω ½W 5%	R27
	Resistor 4.3Ω 2W w.w. TRW B.W.H	R21,37
616-00327	Resistor 4.99K 1/8W 1% MF	R23,26,32
616-00336	Resistor 15K 1/8W 1% MF	R22
616-00338	Resistor 20K 1/8W 1% MF	R38
	Resistor 6.81K 1/8W 1% MF	R12
618-00105	Resistor 165K ½W 1% MF	R10,25,31
618-00106	Resistor 169K ½W 1% MF	R39
663-00311	Transistor 2N3440	Q2,3
663-00333	Transistor 2N4889	Q1
663-00314	Transistor 2N3568	Q5,8,9,14
663-00347	Transistor 2N2914	Q6,10,15
9663-00700	Transistor MPS 3904	Q7,11
9663-00701	Transistor MPS 3906	Q4,16-20
	Transistor MJE 520	Q12
202-00006	Screw, 4-40x¼ BHMS (1)	Prod Ref
240-00001	Nut, Self-Lok, 4-40 (1)	Prod Ref

ASSEMBLY NO. 820-41928

DESCRIPTION STANDARD ACCESSORIES

ASSEMBLY OR PART NO.	DESCRIPTION	SCHEMATIC REF.
	Manual	
706-42003	Assy, Cable Control	
704-42002	Assy, Cable Trigger	
786-00002	Power Cord	

ASSEMBLY NO. 706-42003

DESCRIPTION CONTROL CABLE ASSEMBLY

ASSEMBLY OR PART NO.	DESCRIPTION	SCHEMATIC REF.
700-00305	Connector, DCM-37P	
700-00117	Slidelock, 37 Pin Connector Cannon DC51222-1	
891-00311	Hood,, Junction, Conn	
776-00301	Cable, RG174A/U Coax 20'	Prod Ref
795-00004	Jacket, Extruded ½" PVC 5'	Prod Ref

ASSEMBLY NO. 704-42002

DESCRIPTION TRIGGER CABLE ASSEMBLY

ASSEMBLY OR PART NO.	DESCRIPTION	SCHEMATIC REF.
700-00310	Connector, Amphenol 165-9	
215-41737	Washer, Clamping	
272-41745	Ring, Compr,	
721-00044	Connector, BNC Kings 59-123 UG 88C/U	
776-00300	Cable, Coax RG58A/U 5'	Prod Ref

ASSEMBLY NO. 825-41929

DESCRIPTION COMPLETION MATERIALS

ASSEMBLY OR PART NO.	DESCRIPTION	SCHEMATIC REF.
258-42004	Cover, Top & Bottom	
203-00310	Screw, 6-32x3/8 100°	
	FHMS, S.S., X Point(12)	Prod Ref

ASSEMBLY NO. 820-41987

DESCRIPTION OPTIONAL ACCESSORIES

ASSEMBLY OR PART NO.	DESCRIPTION	SCHEMATIC REF.
	Chassis Slides	

SECTION 6
DRAWINGS

6-1 GENERAL INFORMATION

This section of the manual contains drawings of the subassemblies of the System 1010 and the Type 941 and 942 Remote Sampling Units and the Model 1011 Multiplexer. The drawings list interconnections between circuit boards, show location of components on the boards, and contain schematic diagrams of the boards. Theory of operation is located in Section 3 of this manual and the parts list is located in Section 5. The drawings are in numerical order by assembly designation, beginning with A1 and ending with A9 (and the program line terminater) for the System 1010, and followed by schematic and component location diagrams for the Type 941 and 942 Remote Sampling Units, and for the Model 1011 Multiplexer.

6-2 SCHEMATIC DIAGRAMS

In the schematics, the convention of signal flow from left to right is followed whenever practicable. Component symbology and nomenclature follow generally-accepted practice. Resistance is given in ohms. Inductance and capacitance units (i.e., microhenries, millihenries, picofarads, microfarads) are noted with the numerical value.

SYSTEM 1010
A1-1 SAMPLER

Pin	To:	Signal
1		GND
2		
3		
4		
5		
6		
7		
8		
9		
10		
11		
12		
13		
14		
15		
16		
17		
18		
19		
20		
21		
22		
23		
24		
25		+170V
26		
27		
28		+12V
29		
30		
31		
32		-20V
33		
34		+20V
34		
36		+5V

SYSTEM 1010
A1-1 SAMPLER

Pin	To:	Signal
A		GND
B	A4-1-2	RA Delay Binary 80
C	A4-1-E	" " " 40
D	A4-1-C	" " " 20
E	A4-1-4	" " " 10
F	A4-1-6	" " " 8
H	A4-1-L	" " " 4
J	A4-1-H	" " " 2
K	A4-1-9	" " " 1
L	A4-1-D, A7-2-J	" Mult. " 4
M	A4-1-3, A7-2-L	" " " 2
N	A4-1-8, A5-1-8, A7-2-T	" Range " 1
P	A4-1-J, A5-1-J, A7-2-5	" " " 2
R	A4-1-K, A5-1-K, A7-2-U	" " " 4
S	A4-1-7, A5-1-7, A7-2-V	" " " 8
T		
U		
V		
W		
X		
Y	A3-2-21, A5-2-L, A8-2-F	FRC
Z	A5-1-22	Slow Ramp
A	A8-2-V	Sweepout
B		
C		+170V
D		
E		
F		+12V
H		
J		
K		
L		-20V
M		
N		+20V
P		
R		+5V

SYSTEM 1010
A1-2 SAMPLER

Pin	To:	Signal
1		+5V
2		
3		+20V
4		
5		-20V
6		
7		
8		
9		+12V
10		
11		
12		+170V
13		
14		
15		
16		
17		
18		
19		
20		
21		
22		
23		
24		
25		
26		
27		
28		
29		
30		
31		
32		
33		
34		
35		
36		GND

SYSTEM 1010
A1-2 SAMPLER

Pin	To:	Signal
A		+5V
B		
C		+20V
D		
E		-20V
F		
H		
J		
K		+12V
L		
M		
N		+170V
P		
R		
S		
T		
U	R303	Fast Ramp Load
V		
W		
X		
Y	A5-1-M	Real Time Sync
Z		
A		
B		
C		
D		
E		
F		
H		
J		
K		
L	A3-2-$\overline{C}$, A6-2-$\overline{E}$	1 MHz Clock
M		
N		
P		
R		GND

SYSTEM 1010
COAX CONNECTIONS

From A1	To:	Signal
J5	J106 Pin 12, J107 Pin N	AES
J6	J106 Pin 31, J107 Pin M	AFB
J7	A2 - J1	A SIG
J8	J106 Pin 16, J108 Pin N	BES
J9	J106 Pin 35, J108 Pin M	BFB
J10	A2 - J3	B SIG
J11	J107 Pin K	A Strobe
J12	J108 Pin K	B Strobe

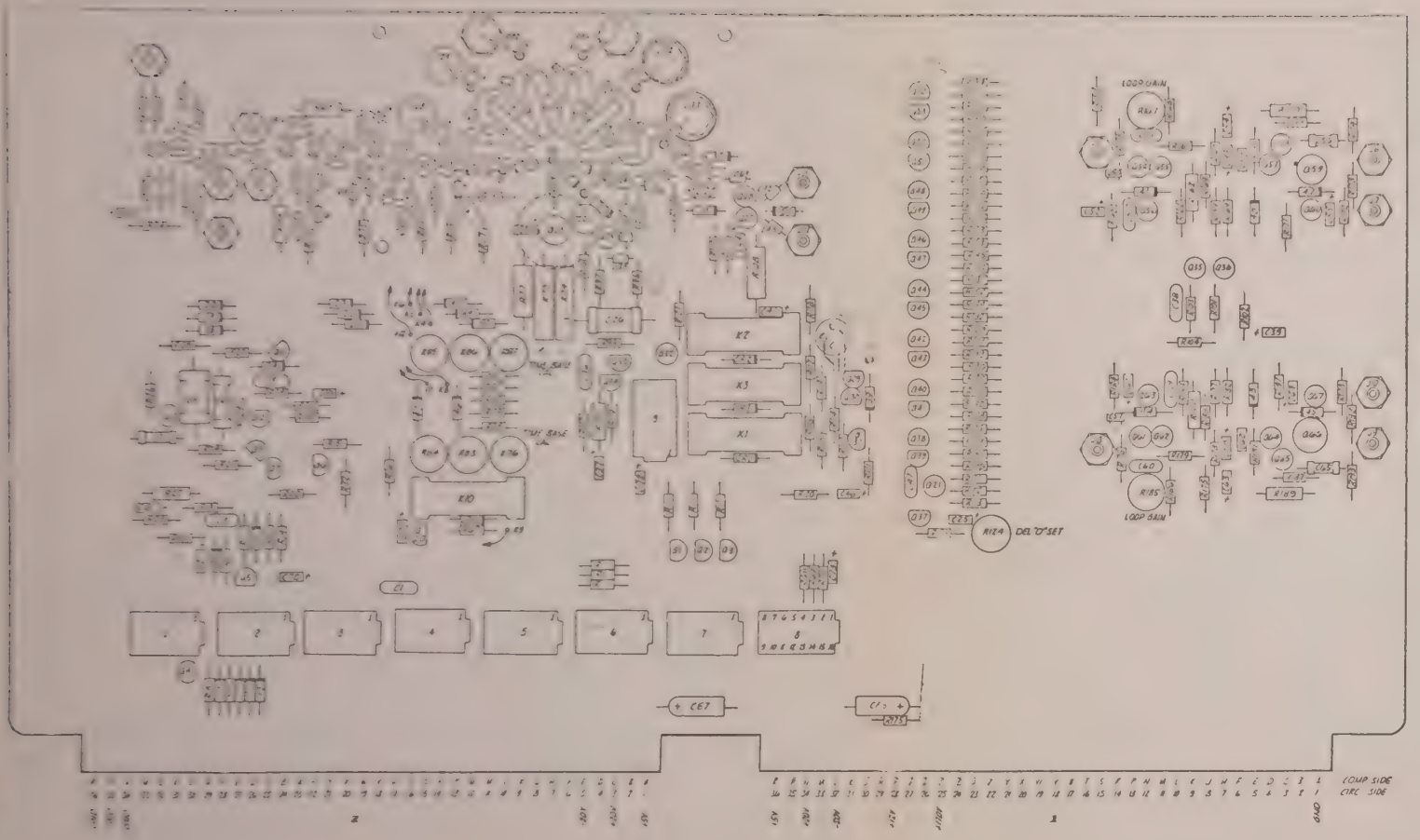

A1

ASSEMELY P.C. BOARD
SAMPLER

401-41754 D

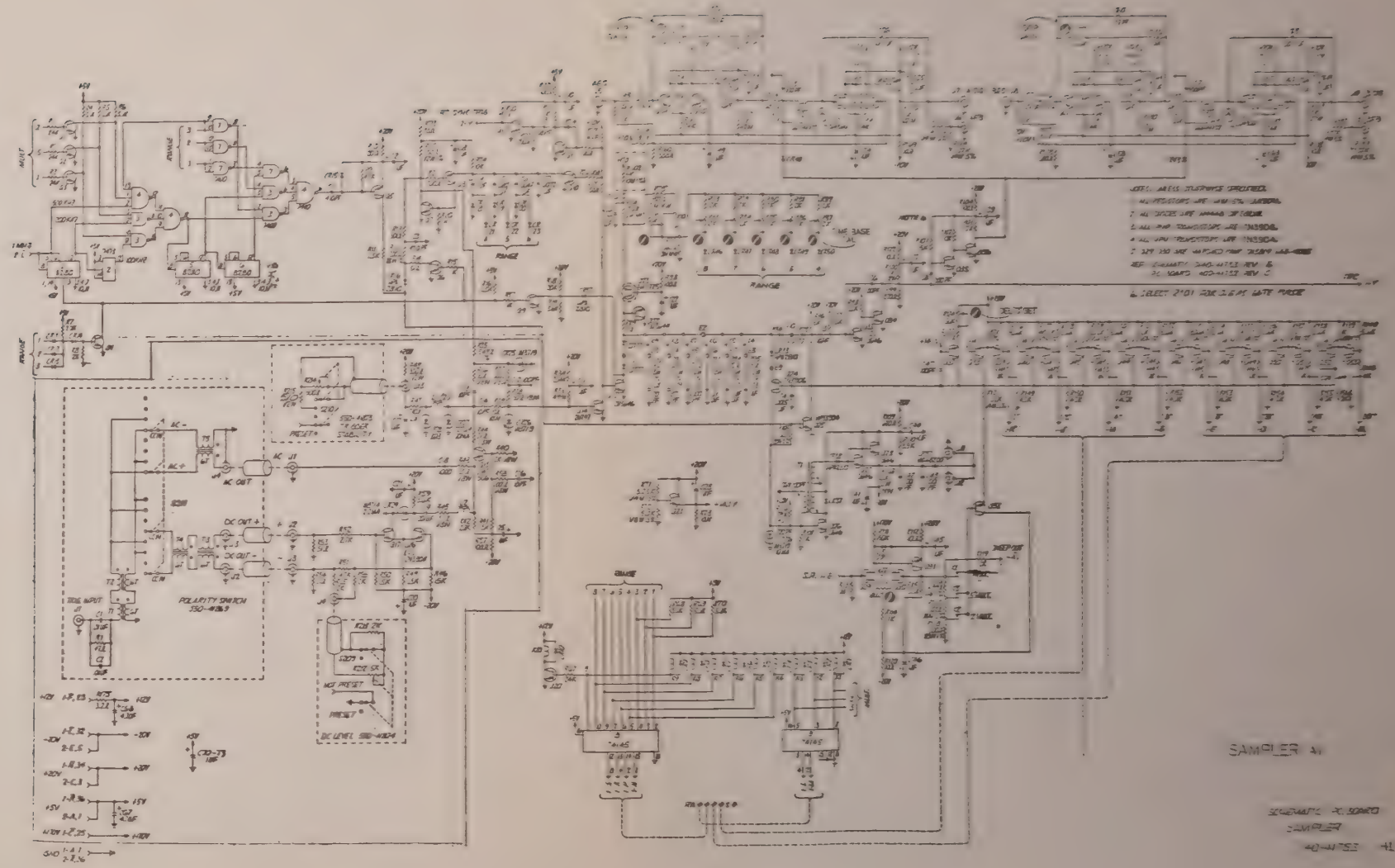
SAMPLER A1
POLARITY SWITCH
DC LEVEL
RANGE
TIME BASE
DELTA SET
SCHEMATIC PC BOARD
SAMPLER

SYSTEM 1010
A2-1 PRE AMP MEMORY

Pin	To:	Signal
1		GND
2		
3		
4		
5		
6		
7		
8		
9		
10		
11		
12		
13		
14		
15		
16		
17		
18		
19		
20		
21		
22		
23		
24		
25		+170V
26		
27		
28		+12V
29		
30		
31		
32		-20V
33		
34		+20V
35		
36		+5V

SYSTEM 1010
A2-1 PRE AMP MEMORY

Pin	To:	Signal
A		GND
B		
C		
D	A3-1-D	B0%
E		
F		
H		
J	A3-1-J	B100%
K	A5-2-M	B0% Mem Gate
L	A5-2-7	Mem Reset
M	A5-2-10	B100% Mem Gate
N	A4-1-20, A7-2-$\overline{E}$	BP Mult Binary 2
P	A4-1-A, A7-2-$\overline{K}$	" " " 4
R	A4-1-24, A7-2-$\overline{R}$	" Range " 2
S	A4-1-$\overline{E}$, A7-2-$\overline{D}$	" " " 1
T	J106-29, J108-H	$\overline{x1}$ Atten. Chan. B
U	J106-28, J108-F	$\overline{x10}$ Atten. Chan. B
V	A4-1-8	BP Polarity Binary 2
W	A4-1-23	" Offset " 8
X	A4-1-$\overline{E}$	" " " 4
Y	A4-1-$\overline{B}$	" " " 2
Z	A4-1-27	" " " 1
A		
B		
C		+170V
D		
E		
F		+12V
H		
J		
K		
L		-20V
M		
N		+20V
P		
R		+5V

SYSTEM 1010
A2-2 PRE AMP MEMORY

Pin	To:	Signal
1		+5V
2		
3		+20V
4		
5		-20V
6		
7		
8		
9		+12V
10		
11		
12		+170V
13		
14		
15		
16		
17		
18		
19		
20		
21		
22		
23		
24		
25		
26		
27		
28		
29		
30		
31		
32		
33		
34		
35		
36		GND

SYSTEM 1010
A2-2 PRE AMP MEMORY

Pin	To:	Signal		
A		+5V		
B	A3-2-B	A0%		
C		+20V		
D				
E		-20V		
F				
H				
J				
K		+12V		
L				
M	A3-2-M	A100%		
N		+170V		
P				
R	A5-2-11	A0% Mem Gate		
S				
T	A5-2-8	A100% Mem Gate		
U				
V				
W	A4-1-N, A7-2-$\overline{H}$	AP Mult	Binary	2
X	A4-1-14, A7-2-$\overline{J}$	" "	"	4
Y				
Z				
A				
B	A4-1-T, A7-2-$\overline{C}$	AP Range	Binary	2
C	A4-1-18, A7-2-$\overline{E}$	" "	"	1
D				
E				
F	J106-10, J107-H	$\overline{X1}$	Atten. Chan. A	
H	J106-9, J107-F	X10	Atten. Chan. A	
J	A4-1-11	AP Polarity	Binary	2
K	A4-1-S	" Offset	"	8
L	A4-1-19	" "	"	4
M	A4-1-15	" "	"	2
N	A4-1-W	" "	"	1
P				
R		GND		

SYSTEM 1010
COAX CONNECTIONS

From A2	To:	Signal
J1	A-1-J7	A Signal Input
J3	A1-J10	B Signal Input
J5	A3-J1	A Signal Output
J6	A8-J2	A Signal Output
J7	A3-J2	B Signal Output
J8	A8-J4	B Signal Output

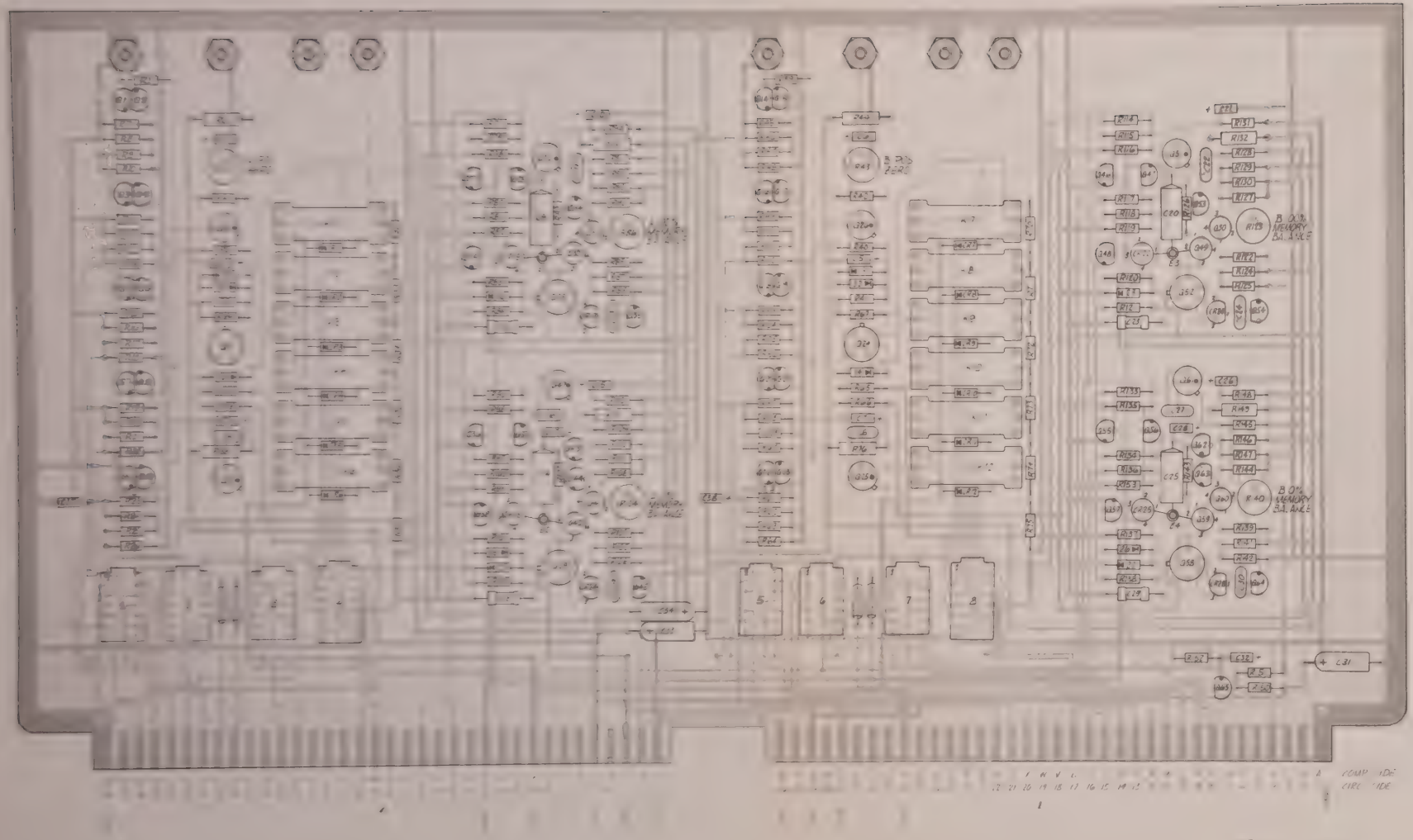

PRE-AMP MEMORY A2

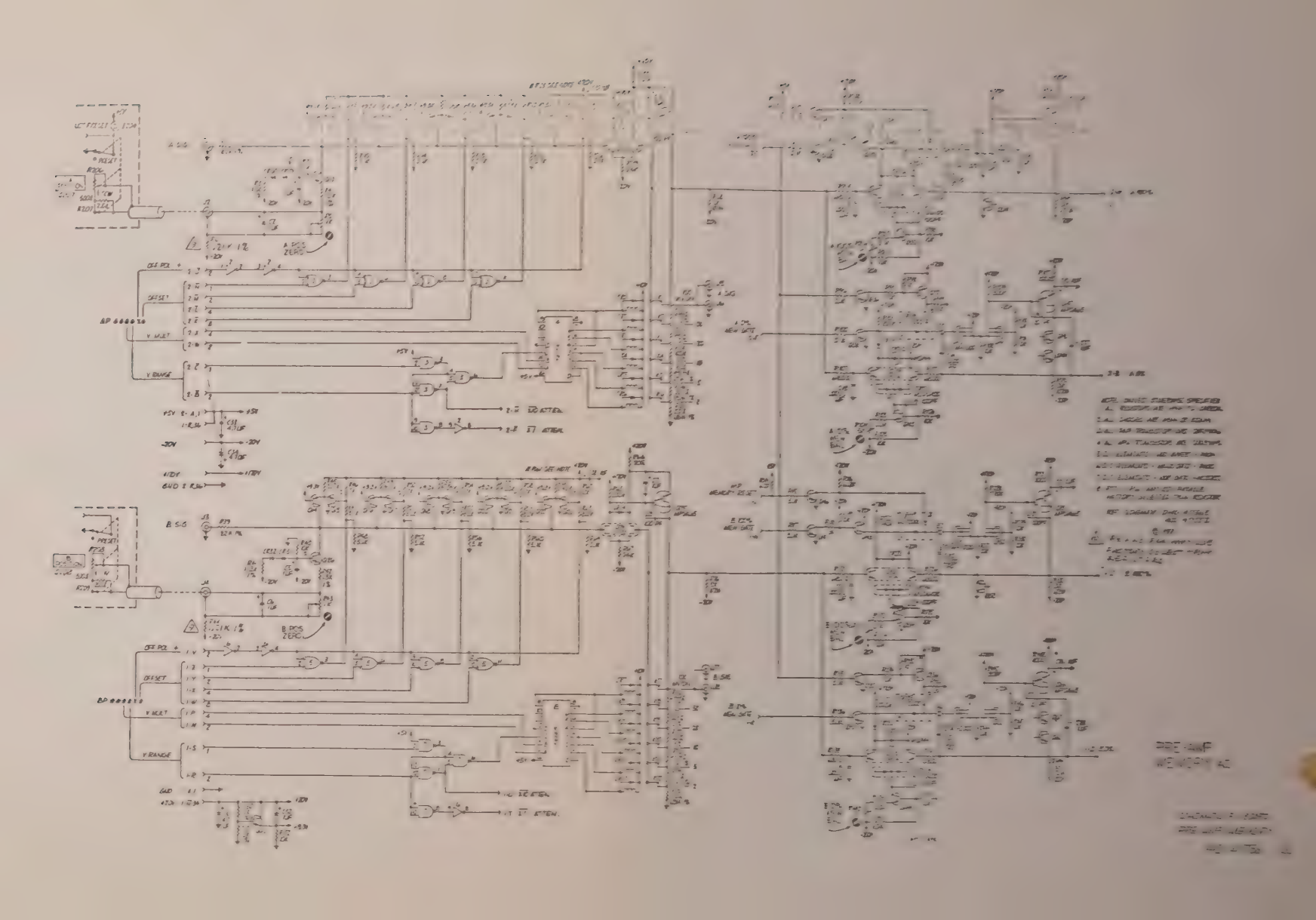

SYSTEM 1010
A3-1 START/STOP LOGIC

Pin	To:	Signal
1		GND
2		
3		
4		
5		
6		
7		
8		
9		
10		
11		
12		
13		
14		
15		
16		
17		
18		
19		
20		
21		
22		
23		
24		
25		+170V
26		
27		
28		+12V
29		
30		
31		
32		-20V
33		
34		+20V
35		
36		+5V

SYSTEM 1010
A3-1 START/STOP LOGIC

Pin	To:	Signal
A		GND
B		
C	A4-2-N, A8-2-P	SP A-B Channel Sel.Binary 1
D	A2-1-D	B0% Memory
E		
F		
H		
J	A2-1-J	B100% Memory
K		
L		
M		
N	A4-2-S	SP % ± Binary 4
P	A4-2-12, A5-2-H	SP " " " 8
R		
S		
T	A4-1-5, A7-2-Y, A8-1-$\overline{M}$	RA Mode " 1
U	A4-1-B, A7-2-$\overline{A}$, A8-1-33	RA " " 2
V		
W		
X		
Y	A4-2-5, A8-2-M	ST A-B Channel Sel.Binary 1
Z	A4-2-F, A5-2-F	ST % ± " 8
A	A4-2-8	ST % ± " 4
B	A5-1-$\overline{D}$, A7-2-$\overline{M}$	Notched Meas. Gate
C		+170V
D		
E		
F		+12V
H		
J		
K		
L		-20V
M		
N		+20V
P		
R		+5V

SYSTEM 1010
A3-2 START/STOP LOGIC

Pin	To:			Signal	
1				+5V	
2					
3				+20V	
4					
5				-20V	
6					
7					
8					
9				+12V	
10					
11					
12				+170V	
13					
14					
15					
16					
17					
18					
19					
20					
21	A1-1-Y, A5-2-L, A8-2-F			FRC	
22					
23					
24					
25					
26					
27					
28	A4-2-10	SP	#	Binary	2
29	A4-2-M	"	"	"	1
30	A4-2-L	"	"	"	8
31	A4-2-11	"	"	"	4
32	A4-2-13	"	"	"	20
33	A4-2-R	"	"	"	10
34	A4-2-P	"	"	"	80
35	A4-2-14	"	"	"	40
36				GND	"

SYSTEM 1010
A3-2 START/STOP LOGIC

Pin	To:	Signal		
A		+5V		
B	A2-2-B	A0% Memory		
C		+20V		
D				
E		-20V		
F				
H				
J				
K		+12V		
L				
M	A2-2-M	A100% Memory		
N		+170V		
P				
R				
S	A4-2-C	ST Slope	Binary	2
T	A4-2-9	SP "	"	2
U				
V				
W	A4-1-M	RA Sweep	"	4
X	A4-2-K	ST 1st/2nd	"	1
Y				
Z	A4-2-15	SP "	"	1
A	A7-2-F	Meas Clock		
B	A7-2-14	Start		
C	A1-2-$\overline{L}$, A6-2-$\overline{E}$	1 MHz Clock		
D				
E	A7-2-$\overline{L}$	Stop		
F	A4-2-7	ST #	Binary	10
H	A4-2-6	" #	"	80
J	A4-2-J	" #	"	40
K	A4-2-H	" #	"	20
L	A4-2-E	" #	"	4
M	A4-2-3	" #	"	8
N	A4-2-4	" #	"	1
P	A4-2-D	ST #	"	2
R		GND		

SYSTEM 1010
COAX CONNECTIONS

From A3	TO:	Signal
J1	A2 - J5	A Signal Output
J2	A2 - J7	B Signal Output

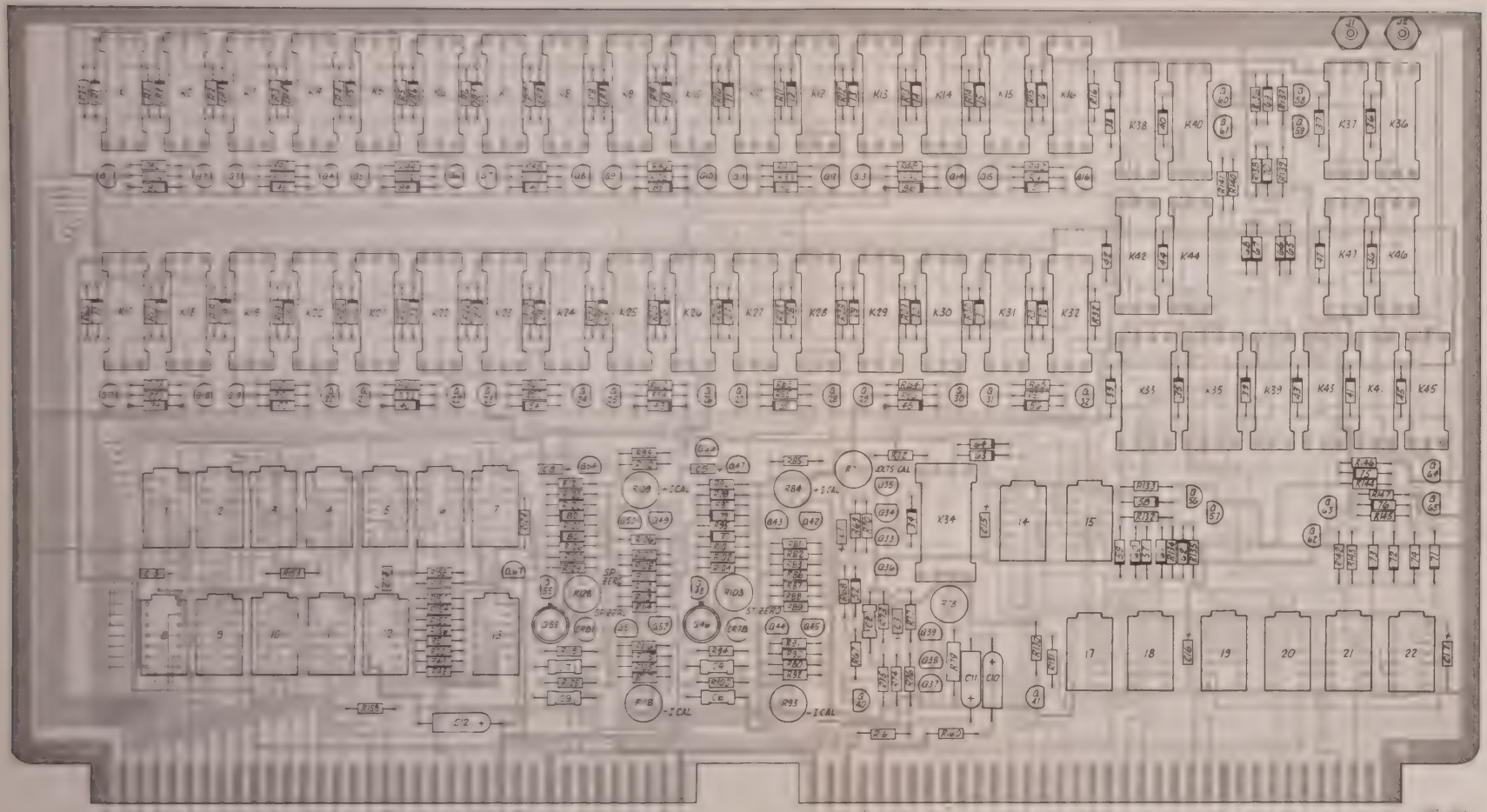

START/STOP LOGIC A3

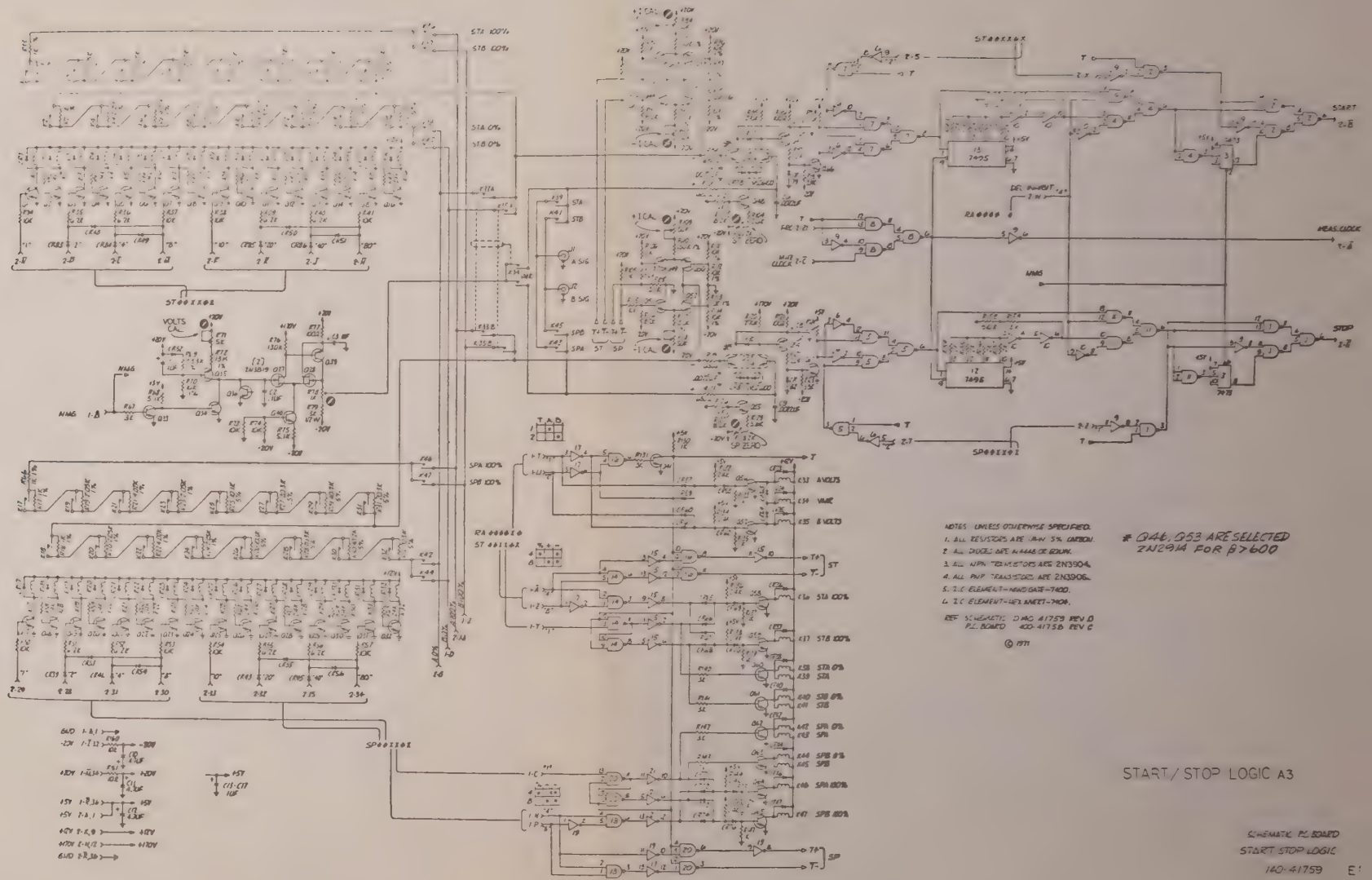
START
STOP
MEAS CLOCK
VOLTS CAL
NOTES UNLESS OTHERWISE SPECIFIED.
1. ALL RESISTORS ARE 1/4W 5% CARBON.
2. ALL DIODES ARE IN4448 OR EQUIV.
3. ALL NPN TRANSISTORS ARE 2N3904.
4. ALL PNP TRANSISTORS ARE 2N3906.
5. I.C. ELEMENT-NAND GATE-7400.
6. I.C. ELEMENT-HEX INVERT-7404.
REF SCHEMATIC D140 41759 REV D
P.C. BOARD 400-41758 REV C
© 1971
* Q46, Q53 ARE SELECTED 2N2914 FOR β>600
START / STOP LOGIC A3
SCHEMATIC P.C. BOARD
START STOP LOGIC
140-41759

SYSTEM 1010
A4-1 PROGRAM MEMORY

Pin	To:	Signal		
1		GND		
2	A1-1-B	RA Delay	Binary	80
3	A1-1-M, A7-2-L	RA Mult	"	2
4	A1-1-E	RA Delay	"	10
5	A3-1-T, A7-2-Y, A8-1-$\overline{M}$	" Mode	"	1
6	A1-1-F	" Delay	"	8
7	A1-1-S, A5-1-7, A7-2-V	" Range	"	8
8	A1-1-N, A5-1-8, A7-2-T	" Range	"	1
9	A1-1-K	" Delay	"	1
10	A5-1-10	" Sweep	"	1
11	A2-2-$\overline{J}$	AP Polarity	"	2
12	J106-8	AP Remote Probe #	"	80
13	J106-5	" " " "	"	10
14	A2-2-X, A7-2-$\overline{J}$	" Mult	"	4
15	A2-2-$\overline{\ }$	" Offset	"	2
16	J106-4	" Remote Probe #	"	8
17	J106-1	" " " "	"	1
18	A2-2-$\overline{C}$, A7-2-$\overline{E}$	" Range	"	1
19	A2-2-$\overline{L}$	" Offset	"	4
20	A2-1-N, A7-2-$\overline{F}$	BP Mult	"	2
21	J106-25	BP Remote Probe #	"	20
22	J106-26	" " " "	"	40
23	A2-1-W	BP Offset	"	8
24	A2-1-R, A7-2-$\overline{B}$	" Range	"	2
25	J106-21	" Remote Probe #	"	2
26	J106-22	" " " "	"	4
27	A2-1-Z	" Offset	"	1
28	A6-2-35, S204	New Program		
29	A6-1-$\overline{M}$	RA Field Code		
30	A6-1-K	ASC # Input 8		
31	A6-1-$\overline{A}$	Memory Clock		
32	A6-1-$\overline{K}$	ST Field Code		
33	A6-1-$\overline{P}$	SP " "		
34	A6-1-30	AM " "		
35				
36		+5V		

SYSTEM 1010
A4-1 PROGRAM MEMORY

Pin	To:	Signal	
A		GND	
B	A3-1-U, A7-2-$\overline{A}$, A8-1-33	RA Mode	Binary 2
C	A1-1-D	" Delay	" 20
D	A1-1-L, A7-2-J	" Mult	" 4
E	A1-1-C	" Delay	" 40
F	A5-1-F, A7-2-$\overline{N}$	" Sweep	" 2
H	A1-1-J	" Delay	" 2
J	A1-1-P, A5-1-J, A7-2-S	" Range	" 2
K	A1-1-R, A5-1-K, A7-2-U	" Range	" 4
L	A1-1-H	" Delay	" 4
M	A3-2-W	" Sweep	" 4
N	A2-2-W, A7-2-$\overline{H}$	AP Mult	" 2
P	J106-6	" Remote Probe #	" 20
R	J106-7	" " " "	" 40
S	A2-2-$\overline{K}$	" Offset	" 8
T	A2-2-$\overline{B}$, A7-2-$\overline{C}$	" Range	" 2
U	J106-2	" Remote Probe #	" 2
V	J106-3	" " " "	" 4
W	A2-2-$\overline{N}$	" Offset	" 1
X	A2-1-V	BP Polarity	" 2
Y	J106-27	" Remote Probe #	" 80
Z	J106-24	" " " "	" 10
A	A2-1-P, A7-2-$\overline{K}$	" Mult	" 4
B	A2-1-Y	" Offset	" 2
C	J106-23	" Remote Probe #	" 8
D	J106-20	" " " "	" 1
E	A2-1-s, A7-2-$\overline{D}$	" Range	" 1
F	A2-1-X	" Offset	" 4
H	A6-1-E	ASCII Input 2	
J	A6-1-J	" " 1	
K	A6-1-H	" " 4	
L	A6-1-$\overline{H}$	AP Field Code	
M	A6-1-33	BM " "	
N	A6-1-29	BP " "	
P			
R			+5V

SYSTEM 1010
A4-2 PROGRAM MEMORY

Pin	To:	Signal		
1			+5V	
2				
3	A3-2-$\overline{M}$	ST #	Binary	8
4	A3-2-$\overline{N}$	" #	"	1
5	A3-1-Y, A8-2-M	" Channel Select	"	1
6	A3-2-$\overline{H}$	" #	"	80
7	A3-2-$\overline{F}$	" #	"	10
8	A3-1-$\overline{A}$	ST % ±	"	4
9	A3-2-T	SP Slope	"	2
10	A3-2-28	" #	"	2
11	A3-2-31	" #	"	4
12	A3-1-P, A5-2-H	" % ±	"	8
13	A3-2-32	" #	"	20
14	A3-2-35	" #	"	40
15	A3-2-Z	SP 1st/2nd	"	1
16	A5-2-25	AM % of F.S. Time	"	80
17	A5-2-20	" " " " "	"	8
18	A5-2-23	" " " " "	"	1
19	A5-2-$\overline{D}$	" " " " "	"	10
20	A5-2-16	" G or P	"	1
21	A5-2-$\overline{E}$	" % of F.S. Time	"	2
22	A5-2-21	" % of F.S. Time	"	80
23	A5-2-Z	" % of F.S. Time	"	10
24	A5-2-U	" PG or R	"	1
25	A5-2-$\overline{B}$	AM % of F.S. Time	"	4
26	A5-2-$\overline{M}$	BM " " " "	"	80
27	A5-2-$\overline{F}$	" " " " "	"	8
28	A5-2-$\overline{K}$	" " " " "	"	1
29	A5-2-34	" " " " "	"	10
30	A5-2-V	" G or P	"	1
31	A5-2-35	" % of F.S. Time	"	2
32	A5-2-$\overline{H}$	" " " " "	"	80
33	A5-2-30	" " " " "	"	10
34	A5-2-W	" G.P. or R	"	1
35	A5-2-32	BM % of F.S. Time	"	4
36			GND	

SYSTEM 1010
A4-2 PROGRAM MEMORY

Pin	To:	Signal	
A		+5V	
B			
C	A3-2-S	ST Slope	Binary 2
D	A3-2-$\overline{P}$	" #	" 2
E	A3-2-$\overline{L}$	" #	" 4
F	A3-1-A, A5-2-F	" % ±	" 8
H	A3-2-$\overline{K}$	" #	" 20
J	A3-2-$\overline{J}$	" #	" 40
K	A3-2-X	ST 1st/2nd	" 1
L	A3-2-30	SP #	" 8
M	A3-2-29	" #	" 1
N	A3-1-C, A8-2-P	" A-B Channel Select	" 1
P	A3-2-34	" #	" 80
R	A3-2-33	" #	" 10
S	A3-1-N	SP % ±	" 4
T			
U	A5-2-26	AM % of F.S. Time	" 20
V	A5-2-$\overline{A}$	" " " " "	" 2
W	A5-2-X	" " " " "	" 4
X	A5-2-$\overline{C}$	" " " " "	" 40
Y	A5-2-24	" " " " "	" 8
Z	A5-2-17	" P,G, or R	" 2
A	A5-2-22	" % of F.S. Time	" 20
B	A5-2-Y	" " " " "	" 40
C	A5-2-27	AM % of F.S. Time	" 1
D			
E	A5-2-$\overline{N}$	BM % of F.S. Time	" 20
F	A5-2-31	" " " " "	" 2
H	A5-2-28	" " " " "	" 4
J	A5-2-33	" " " " "	" 40
K	A5-2-$\overline{L}$	" " " " "	" 8
L	A5-2-19	" P,G, or R	" 2
M	A5-2-$\overline{J}$	" % of F.S. Time	" 20
N	A5-2-29	" " " " "	" 40
P	A5-2-$\overline{P}$	" " " " "	" 1
R		BM	GND

SYSTEM 1010
A5-1 CONTROL LOGIC

Pin	To:	Signal	
1		GND	
2			
3			
4			
5			
6			
7	A1-1-S, A4-1-7, A7-2-V	RA Range Binary	8
8	A1-1-N, A4-1-8, A7-2-T	" " "	1
9			
10	A4-1-10	" Sweep "	1
11			
12			
13			
14	A8-2-U	A 100% Mem DOT	
15	A8-2-R	B 100% " "	
16	A8-2-T	A 0% " "	
17	A8-2-S	B 0% " "	
18			
19			
20			
21			
22	A1-1-Z	Slow Ramp	
23			
24			
25		+170 V	
26			
27			
28		+12 V	
29			
30			
31			
32		-20 V	
33			
34		+20 V	
35			
36		+5 V	

SYSTEM 1010
A5-1 CONTROL LOGIC

Pin	To:	Signal	
A		GND	
B			
C			
D			
E			
F	A4-1-F, A7-2-$\overline{N}$	RA Sweep	Binary 2
H			
J	A1-1-P, A4-1-J, A7-2-S	" Range	" 2
K	A1-1-R, A4-1-K, A7-2-U	" "	" 4
L			
M	A1-2-Y	Real Time Sync.	
N			
P			
R	A7-1-$\overline{J}$	Chopper Gate	
S	A8-2-H	Reset A-B F/F	
T	A8-2-L	Sweep Unblank	
U	A6-2-X, J105, J109-15	Meas. in Prog.	
V			
W			
X			
Y	A7-2-P	End of Every Sweep	
Z	A7-1-W	Meas. Gate Reset	
A	S202 F.P.-5	Start In	
B	S203 FP J109-22	Switch Closure Start In	
C		+170 V	
D	A3-1-$\overline{B}$, A7-2-$\overline{M}$	Notched Meas. Gate	
E			
F		+12 V	
H	A7-2-Z, A8-1-14	SSI	
J	S202-2 FP	CONT/REMOTE GO	
K			
L		-20 V	
M			
N		+20 V	
P			
R		+5 V	

SYSTEM 1010
A5-2 CONTROL LOGIC

Pin	To:	Signal	
1		+5 V	
2			
3		+20 V	
4			
5		-20 V	
6			
7	A2-1-L.	Memory Reset	
8	A2-2-T.	A 100% Mem. Gate	
9		+12 V	
10	A2-1-M.	B 100% Mem. Gate	
11	A2-2-R.	A 0% Mem. Gate	
12		+170 V	
13			
14			
15			
16	A4-2-20.	AM G or P	Binary 1
17	A4-2-Z.	" G,P, or R	" 2
18			
19	A4-2-$\overline{L}$.	BM G,P, or R	" 2
20	A4-2-17.	AM % of F.S. Time	" 8
21	A4-2-22.	" " " " "	" 80
22	A4-2-$\overline{A}$.	" " " " "	" 20
23	A4-2-18	" " " " "	" 1
24	A4-2-Y	" " " " "	" 8
25	A4-2-16	" " " " "	" 80
26	A4-2-U	" " " " "	" 20
27	A4-2-$\overline{C}$	" " " " "	" 1
28	A4-2-$\overline{H}$.	BM " " " "	" 4
29	A4-2-$\overline{N}$.	" " " " "	" 40
30	A4-2-33	" " " " "	" 10
31	A4-2-$\overline{F}$.	" " " " "	" 2
32	A4-2-35.	" " " " "	" 4
33	A4-2-$\overline{J}$.	" " " " "	" 40
34	A4-2-29	" " " " "	" 10
35	A4-2-31	" " " " "	" 2
36			GND

SYSTEM 1010
A5-2 CONTROL LOGIC

Pin	To:	Signal		
A		+5 V		
B	A8-2-J.	DRO Display		
C		+20 V		
D	A6-1-31, J109-11, S202-1.	End of Prog.		
E		-20 V		
F	A3-1-Z, A4-2-F.	ST % ±	Binary	8
H	A3-1-P, A4-2-12.	SP % ±	"	8
J				
K		+12 V		
L	A1-1-Y, A3-2-21, A8-2-F	FRC Clock		
M	A2-1-K.	B 0% Mem. Gate		
N		+170 V		
P				
R	A7-1-$\overline{M}$.	A Ref.		
S	A7-1-$\overline{K}$	B Ref.		
T				
U	A4-2-24.	AM G,P, or R	Binary	1
V	A4-2-30.	BM G or P	"	1
W	A4-2-34.	" G, P, or R	"	1
X	A4-2-W.	AM % of F.S. Time	"	4
Y	A4-2-$\overline{B}$.	" " " " "	"	40
Z	A4-2-23.	" " " " "	"	10
A	A4-2-V.	" " " " "	"	2
B	A5-2-25.	" " " " "	"	4
C	A4-2-X	" " " " "	"	40
D	A4-2-19.	" " " " "	"	10
E	A4-2-21	" " " " "	"	2
F	A4-2-27.	BM " " " "	"	8
H	A4-2-32.	" " " " "	"	80
J	A4-2-$\overline{M}$.	" " " " "	"	20
K	A4-2-28.	" " " " "	"	1
L	A4-2-$\overline{K}$.	" " " " "	"	8
M	A4-2-26.	" " " " "	"	80
N	A4-2-$\overline{E}$.	" " " " "	"	20
P	A4-2-$\overline{P}$.	" " " " "	"	1
R			GND	

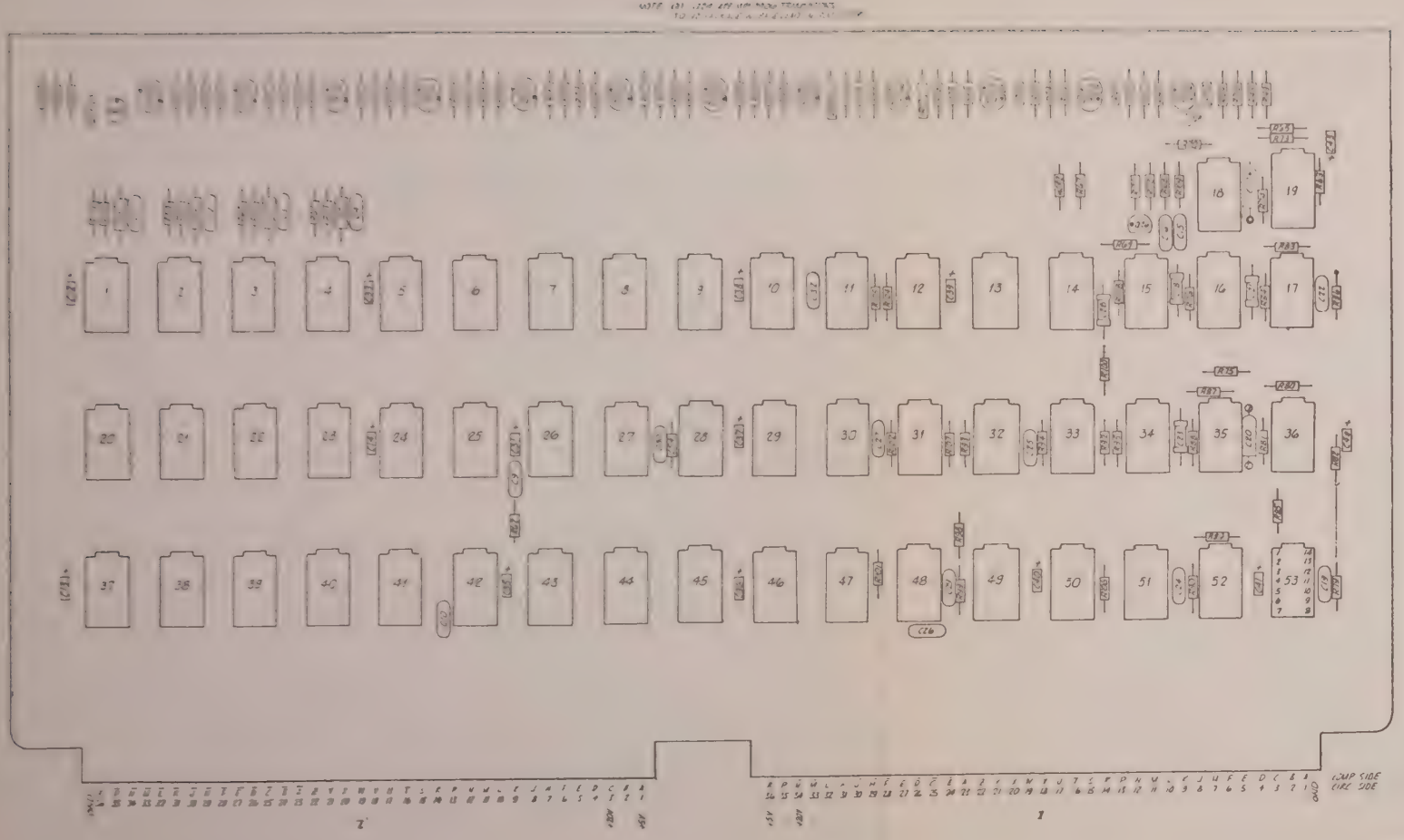

A5

ASSEMBLY PC BOARD
CONTROL LOGIC

D 401-417-66 D

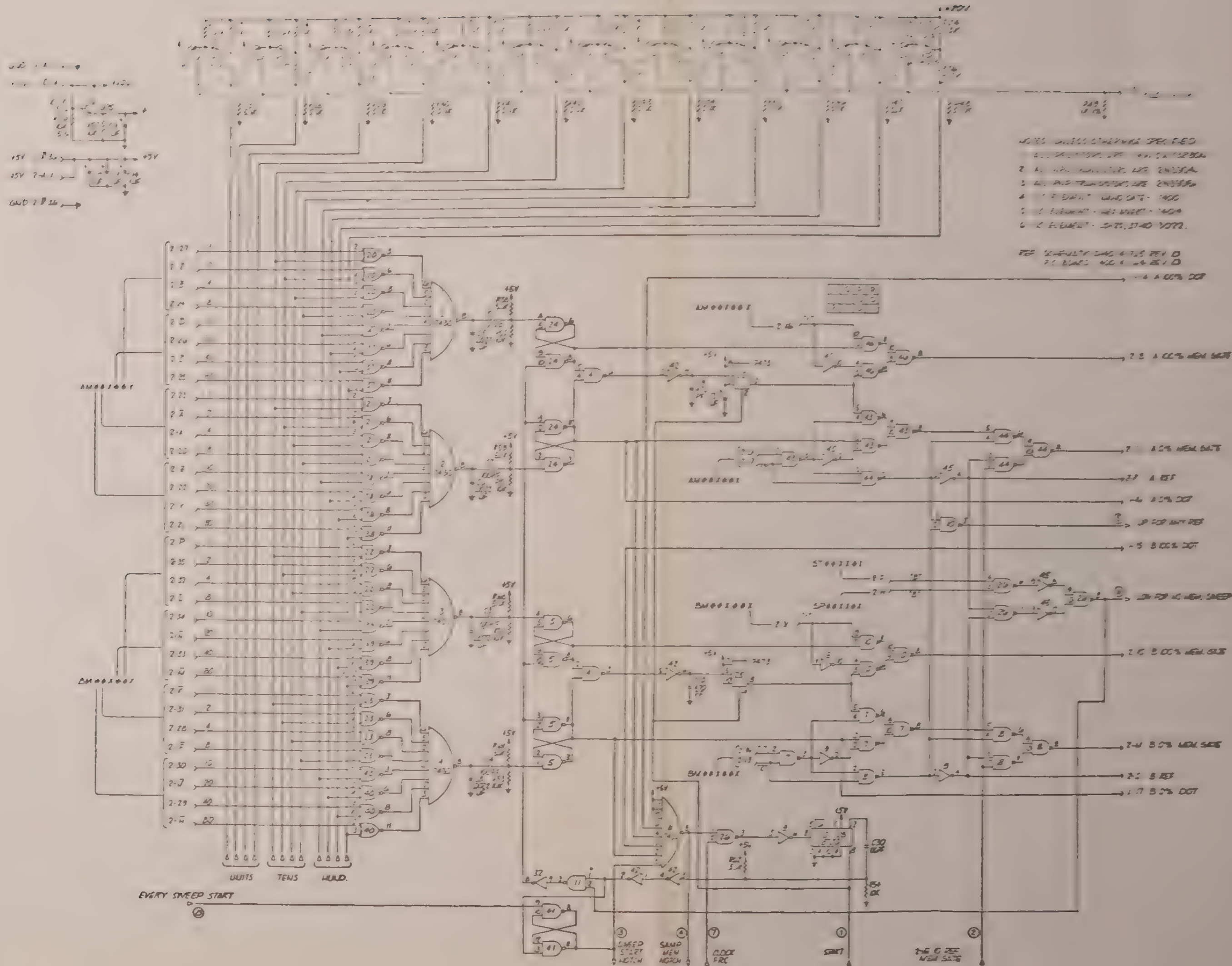

CONTROL LOGIC A5

CONTROL LOGIC

D

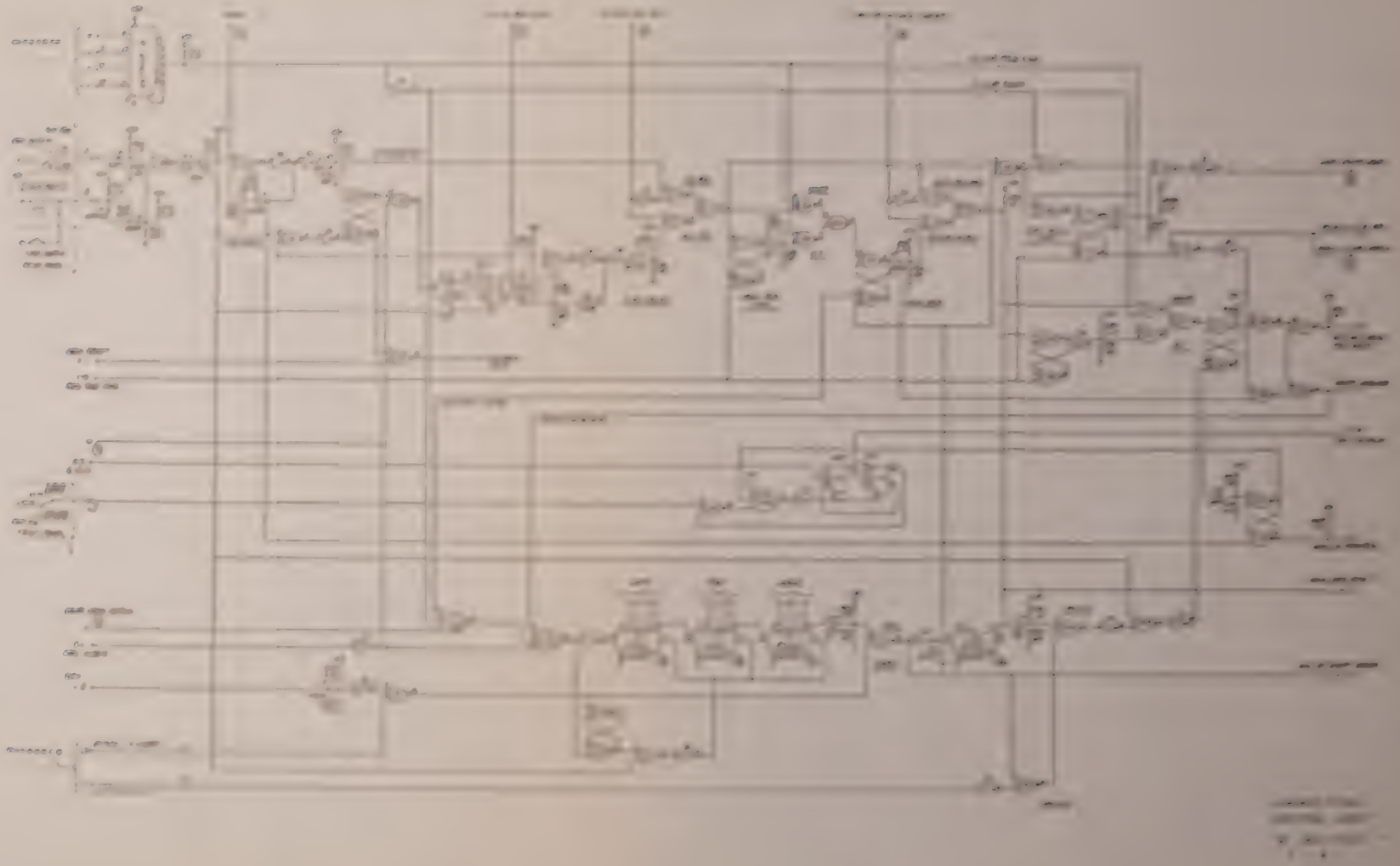

SYSTEM 1010
A6-1 DISPLAY LOGIC

Pin	To:	Signal
1		GND
2	J102-18 , J103-18.	Computer Clock
3		
4		
5		
6		
7		
8		
9	J102-14, J103-14.	ASCII Input "7"
10		
11		
12		
13		
14		
15		
16		
17		
18		
19		
20		
21		
22		
23		
24		
25		+170V
26		
27		
28		+12V
29	A4-1-$\overline{N}$	BP Field Code
30	A4-1-34	AM Field Code
31	A5-1-D, J109-11, S202-1.	End of Program
32		-20V
33	A4-1-$\overline{M}$.	BM Field Code
34		+20V
35	S202-6	Go Command
36		+5V

SYSTEM 1010
A 6-1 DISPLAY LOGIC

Pin	To:	Signal
A		GND
B	J102-3, J103-3.	ASCII Input 2
C	J102-5, J103-5.	ASCII Input 3
D	J102-11, J103-11.	ASCII Input 6
E	A4-1-$\overline{H}$.	Memory ASCII 2
F	J102-9, J103-9.	ASCII Input 5
H	A4-1-$\overline{K}$.	Memory ASCII 3
J	A4-1-$\overline{J}$.	Memory ASCII 1
K	A4-1-30	Memory ASCII 4
L	J102-1, J103-1.	ASCII Input 1
M	J102-7, J103-7.	ASCII Input 4
N		
P		
R		
S		
T		
U		
V		
W		
X		
Y		
Z		
A	A4-1-31.	Memory Clock
B		
C		+170V
D	A6-2-$\overline{D}$	Computer Flag
E	A8-2-B.	Dot Matrix Intensity
F		+12V
H	A4-1-$\overline{L}$	AP Field Code
J		
K	A4-1-32	ST Field Code
L		-20V
M	A4-1-29.	RA Field Code
N		+20V
P	A4-1-33.	SP Field Code
R		+5V

SYSTEM 1010
A6-2 DISPLAY LOGIC

Pin	To:	Signal
1		+5V
2		
3		+20V
4		
5		-20V
6		
7		
8		+12V
9		
10		
11		+170V
12		
13		
14		
15		
16		
17		
18		
19		
20		
21		
22		
23		
24		
25		
26		
27		
28		
29		
30		
31		
32		
33		
34		
35	A4-1-28, S204.	New Program
36		GND

SYSTEM 1010
A6-2 DISPLAY LOGIC

Pin	To:	Signal
A		+5V
B	A7-1-J.	DRO Input 1
C		+20V
D	A7-1-H.	DRO Input 3
E		-20V
F	A7-1-F.	DRO Input 4
H	A7-1-M.	DRO Input 2
J	J109-9.	Program Output 6
K		+12V
L	J109-8.	Program Output 5
M	J109-6.	Program Output 3
N		+170V
P	J109-7.	Program Output 4
R	J109-4.	Program Output 1
S	J109-5.	Program Output 2
T	A7-1-L.	DRO Input 5
U	A7-1-K.	DRO Input 6
V	J109-28.	Data Gate
W		
X	A5-1-U, J105, J109-15.	Meas. In. Prog.
Y	A7-2-20.	Character Counter 2
Z	A7-2-19.	Charactor Counter 1
A	A7-2-21.	Character Counter 4
B	J109-30.	Program Output Command
C	J109-19.	Data Clock
D	J102-24, A6-1-$\overline{D}$	Computer FLAG
E	A1-2-$\overline{L}$, A3-2-$\overline{C}$	1MHz Clock
F		
H		
J		
K		
L	J102-13	Ready Flag
M	J102-20, J103-20.	Keyboard Clock
N		
P	A8-2-D	Character Place Marker
R		GND

SYSTEM 1010
COAX CONNECTIONS

From A6	To:	Signal
J1	A8 - J1	Prog/Dro Horiz
J2	A8 - J3	Prog/Dro Vert

DISPLAY LOGIC BD

D-401-41/69 6

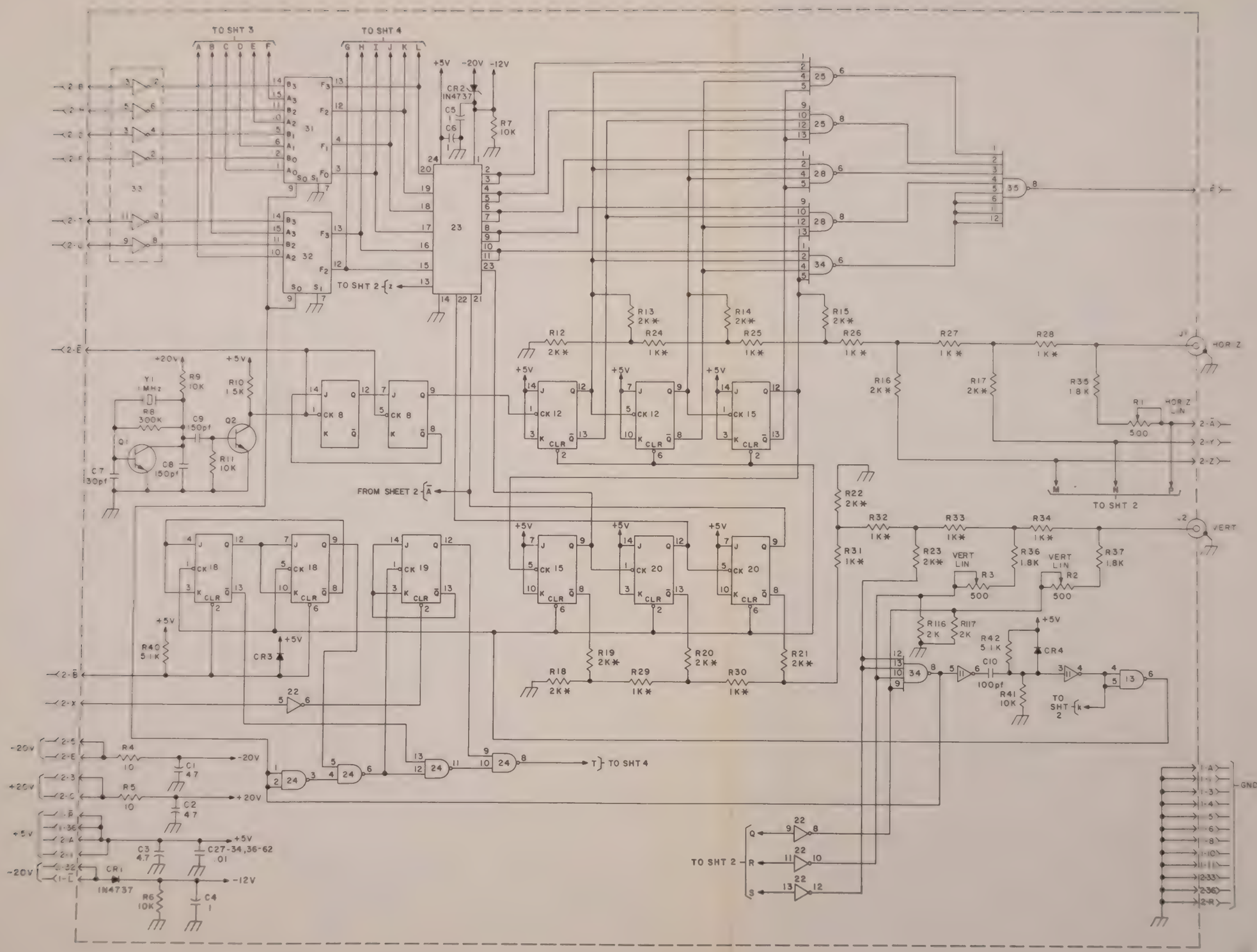

NOTES: (UNLESS OTHERWISE SPECIFIED)

1. ALL RESISTORS ARE IN OHMS, 1/4 WATT, 5%
2. ALL CAPACITORS ARE IN MICROFARADS
3. ALL DIODES ARE IN4448 TYPE
4. ALL TRANSISTORS ARE 2N3904 TYPE
5. * DENOTES 1/8 WATT 1% MF TYPE
6. IC 1, 7, 9, 11, 22, 33, 36, 64, 68 & 69 ARE MC7404P, PIN 7 GND, PIN 14 Vcc
7. IC 2, 8, 12, 15 & 18-20 ARE MC7473P, PIN 11 GND, PIN 4 Vcc
8. IC 3-6, 13, 14, 24, 41, 42 & 45 ARE SN7400N, PIN 7 GND, PIN 14 Vcc.
9. IC10 IS A MC7472P, PIN 7 GND, PIN 14 Vcc
10. IC16, 17, 21 & 27 ARE N8281A, PIN 7 GND, PIN 14 Vcc.
11. IC23 IS A TMS2501NC, PIN 12 GND, PIN 24 Vcc.
12. IC25, 28 & 34 ARE MC7420P, PIN 7 GND, PIN 14 Vcc
13. IC26 & 29 ARE MC3022P, PIN 7 GND, PIN 14 Vcc
14. IC30, 35 & 40 ARE MC7430P, PIN 7 GND, PIN 14 Vcc.
15. IC31 & 32 ARE N82338, PIN 8 GND, PIN 16 Vcc.
16. IC37 & 53 ARE SN7406, PIN 7 GND, PIN 14 Vcc
17. IC38, 44, 51 & 52 ARE SN7408N, PIN 7 GND, PIN 14 Vcc
18. IC39 & 65 ARE SN7474N, PIN 7 GND, PIN 14 Vcc
19. IC43, 48 & 49 ARE SN74175N, PIN 8 GND, PIN 16 Vcc
20. IC46 & 47 ARE N8280A, PIN 7 GND, PIN 14 Vcc
21. IC50 IS A SN74174N, PIN 8 GND, PIN 16 Vcc.
22. IC54, 56, 57, 60 & 62 ARE SN7402N, PIN 7 GND, PIN 14 Vcc.
23. IC55, 59 & 61 ARE SN7427N, PIN 7 GND, PIN 14 Vcc.
24. IC58, 63, 66 & 71 ARE MC7442P, PIN 8 GND, PIN 16 Vcc
25. IC67 & 72 ARE 2518B, PIN 4 GND, PIN 16 Vcc.
26. IC70, 73 & 74 ARE SN7451N, PIN 7 GND, PIN 14 Vcc
27. REF DWGS :
    P.C.B. — 400-41767
    ASSY — 401-41769

SCHEMATIC
DISPLAY LOGIC BOARD

1010
D-140-41768 K

SCHEMATIC
DISPLAY LOGIC BOARD

D-[43]-41768 K

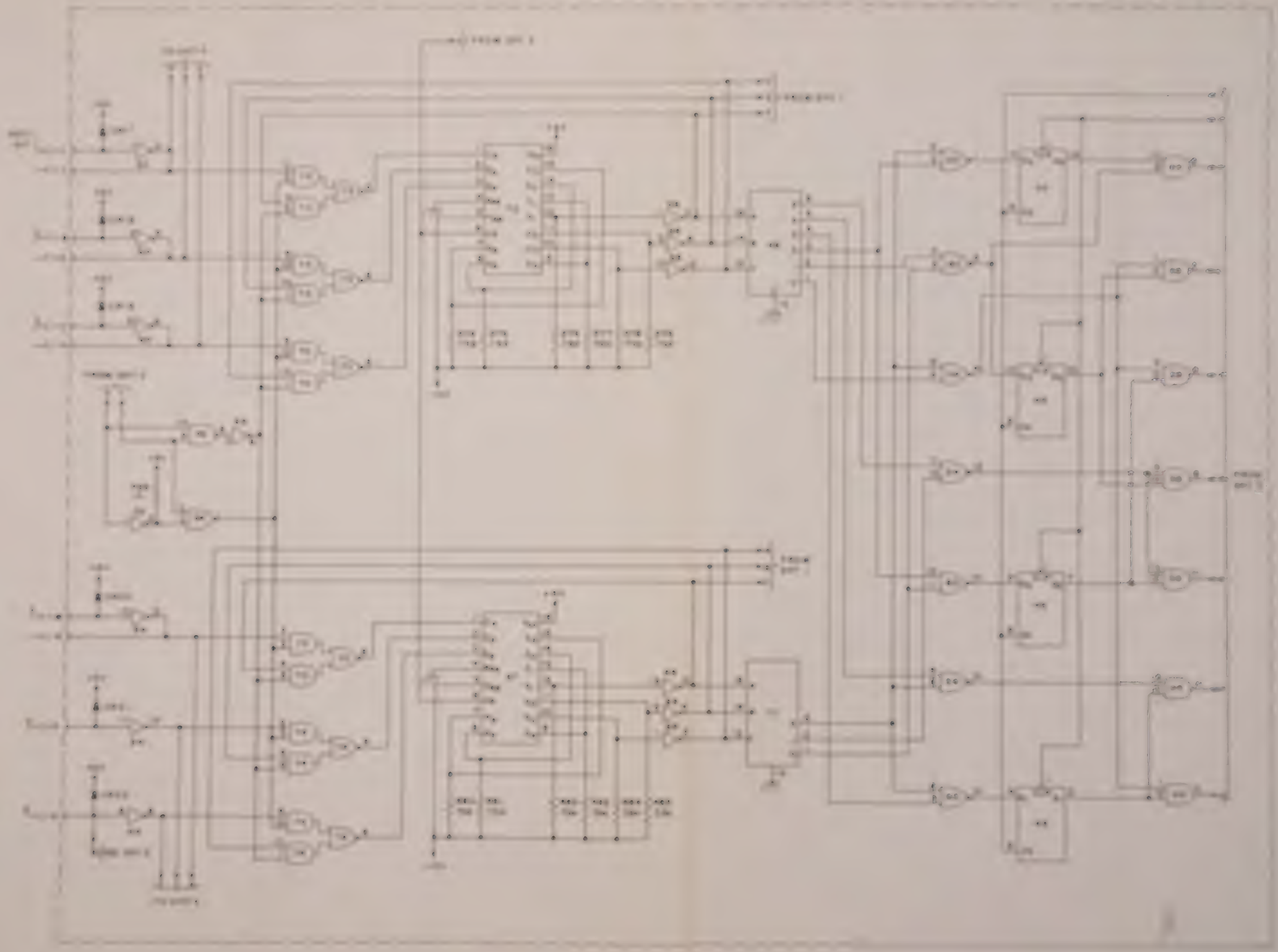

SCHEMATIC
DISPLAY LOGIC BOARD

D-140-4768

SYSTEM 1010
A7-1

Pin	To:	Signal
1		GND
2		
3		
4		
5		
6		
7		
8		
9		
10		
11		
12		
13		
14		
15		
16		
17		
18		
19		
20		
21		
22		
23		
24		
25		+170 V
26		
27		
28		+12 V
29		
30		
31		
32		-20 V
33		
34		+20 V
35		
36		+5 V

SYSTEM 1010
A7-1

Pin	To:	Signal
A		GND
B		
C		
D		
E		
F	A6-2-F.	DRO Output 4
H	A6-2-D.	" " 3
J	A6-2-B.	" " 1
K	A6-2-U.	" " 6
L	A6-2-T.	" " 5
M	A6-2-H.	" " 2
N		
P		
R		
S		
T		
U		
V		
W	A5-1-Z.	Meas. Gate Reset
X		
Y		
Z		
A		
B		
C		+170 V
D		
E	J106-14, J107-C	A Chopper
F		+12 V
H	J106-33, J108-C	B Chopper
J	A5-1-R	Chopper
K	A5-2-S	B. Ref.
L		-20 V
M	A5-2-R.	A Ref.
N		+20 V
P		
R		+5 V

SYSTEM 1010
A7-2

Pin	To:	Signal
1		+5 V
2		
3		+20 V
4		
5		-20 V
6		
7		
8		
9		+12 V
10		
11		
12		+170 V
13		
14	A3-2-$\overline{B}$	START
15		
16		
17		
18		
19	A6-2-Z	Character Counter 1
20	A6-2-Y	" " 2
21	A6-2-$\overline{A}$	" " 4
22		
23		
24		
25		
26		
27		
28		
29		
30		
31		
32		
33		
34		
35		
36		GND

SYSTEM 1010
A7-2

Pin	To:	Signal		
A		+5 V		
B		+12 V		
C		-20 V		
D		Meas. Clock		
E				
F	A3-2-$\overline{A}$.			
H				
J	A1-1-L, A4-1-D	RA Mult.	Binary	4
K		+12 V		
L	A1-1-M, A4-1-3	RA Mult.	Binary	2
M				
N		+170 V		
P	A5-1-Y.	End of Sweep		
R				
S	A1-1-P, A4-1-J, A5-1-J	RA Range	Binary	2
T	A1-1-N, A4-1-8, A5-1-8.	" "	"	1
U	A1-1-R, A4-1-K, A5-1-K	" "	"	4
V	A1-1-5, A4-1-7, A5-1-7.	" "	"	8
W				
X				
Y	A3-1-T, A4-1-5, A8-1-$\overline{M}$.	" Mode	"	1
Z	A5-1-$\overline{H}$, A8-1-14.	SSI		
A	A3-1-U, A4-1-B, A8-1-33.	RA Mode	Binary	2
B	A2-1-R, A4-1-24.	BP Range	"	2
C	A2-2-$\overline{B}$, A4-1-$\underline{T}$.	AP Range	"	2
D	A2-1-5, A4-1-$\overline{E}$.	BP Range	"	1
E	A2-2-$\overline{C}$, A4-1-18.	AP Range	"	1
F	A2-1-N, A4-1-20.	BP Mult	"	2
H	A2-2-W, A4-1-N.	AP "	"	2
J	A2-2-X, A4-1-$\underline{14}$.	AP "	"	4
K	A2-1-P, A4-1-$\overline{A}$	BP "	"	4
L	A3-2-$\overline{E}$.	STOP		
M	A3-1-B, A5-1-$\overline{D}$.	Notched Meas. Gate		
N	A4-1-F, A5-1-F.	RA Sweep	Binary	2
P				
R		GND		

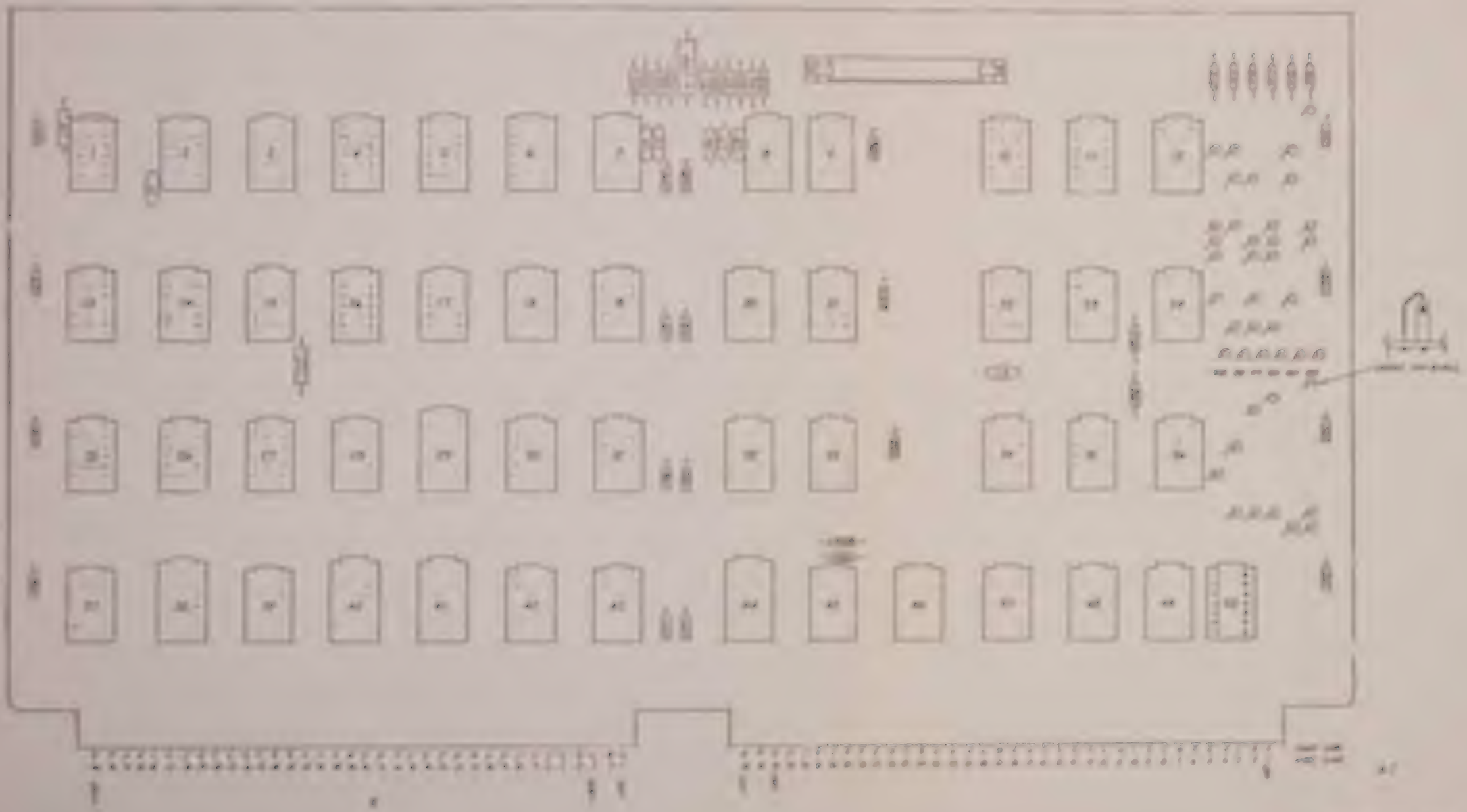

COUNTER & DEC FORMATTER

140-41774 E

SYSTEM 1010
A8-1 VERT/HORIZ/H.V.

Pin	To:		Signal
1			GND
2			
3			
4			
5			
6			
7			
8			Focus
9			
10			
11			Anode
12			
13			
14			Cathode
15			
16			
17			Filament
18			
19			
20			Focus
21			
22			
23			ZAD (Z Axis Driver)
24			
25			
26			
27			
28			
29			
30			
31			
32			-20V
33	A3-1-U, A4-1-B, A7-2-$\overline{A}$.	RA Mode	Binary 2
34			+35V Unregulated
35	R204-		Contrast
36			+5V

SYSTEM 1010
A8-1 VERT/HORIZ/H.V.

Pin	To:		Signal
A			GND
B			
C			
D	CRT-5		GEOM
E	CRT-6		Shield
F			
H			
J	R102-		Focus
K			
L			
M	Anode		Anode
N			
P			
R	CRT-2		Cathode
S			
T			
U	CRT-1, T1-17		Filament
V			
W			
X	R202-		Focus
Y			
Z			
A	CRT-3		ZAD (Z-Axis Driver)
B			
C			
D			
E			
F			
H			
J	R203-		Int. Adj.
K			
L			-20V
M	A3-1-T, A4-1-5, A7-2-Y.	RA Mode	Binary 1
N			+35V Unregulated
P	R203-		Int. Limit
R			+5V

SYSTEM 1010
A8-2 VERT/HORIZ/H.V.

Pin	To:	Signal
1		+5V
2		
3		+20V
4		
5		-20V
6		
7		
8		
9		+12V
10		
11		
12		+170V
13		
14	A5-1-$\overline{H}$, A7-2-Z	SSI
15		
16		
17		
18		
19		
20		
21		
22		
23		
24		
25		
26		
27		
28		
29		
30		
31		
32		
33		
34		
35		
36		GND

SYSTEM 1010
A8-2 VERT/HORIZ/H.V.

Pin	To:	Signal
A		+5V
B	A6-1-$\overline{E}$	DOT Matrix Intensity Control
C		+20V
D	A6-2-$\overline{P}$	Character Marker
E		-20V
F	A1-1-Y, A3-2-21, A5-2-L	FRC Clock
H	A5-1-S	A-B F/F Reset
J	A5-2-B.	DRO Unblank
K		+12V
L	A5-1-T.	Sweep Unblank
M	A3-1-Y, A4-2-5.	ST A-B Channel Sel. Binary 1
N		+170V
P	A3-1-C, A4-2-N.	SP A-B Channel Sel Binary 1
R	A5-1-15.	B100% DOT
S	A5-1-17.	B0% DOT
T	A5-1-16.	A0% DOT
U	A5-1-14.	A100% DOT
V	A1-1-$\overline{A}$.	Sweep Input
W	R210-2.	Horiz Position
X	R210-3.	" "
Y		
Z		
A		
B		
C		
D		
E		
F		
H		
J		
K		
L		
K		
M	S206.	Beam Finder Relay Coil
N		
P		
R		GND

SYSTEM 1010
COAX CONNECTIONS

From A8	To:	Signal
J1	A6 - J1	Prog/Dro Horiz
J2	A2 - J6	A Signal
J3	A6 - J2	Prog/Dro Vert
J4	A2 - J8	B Signal

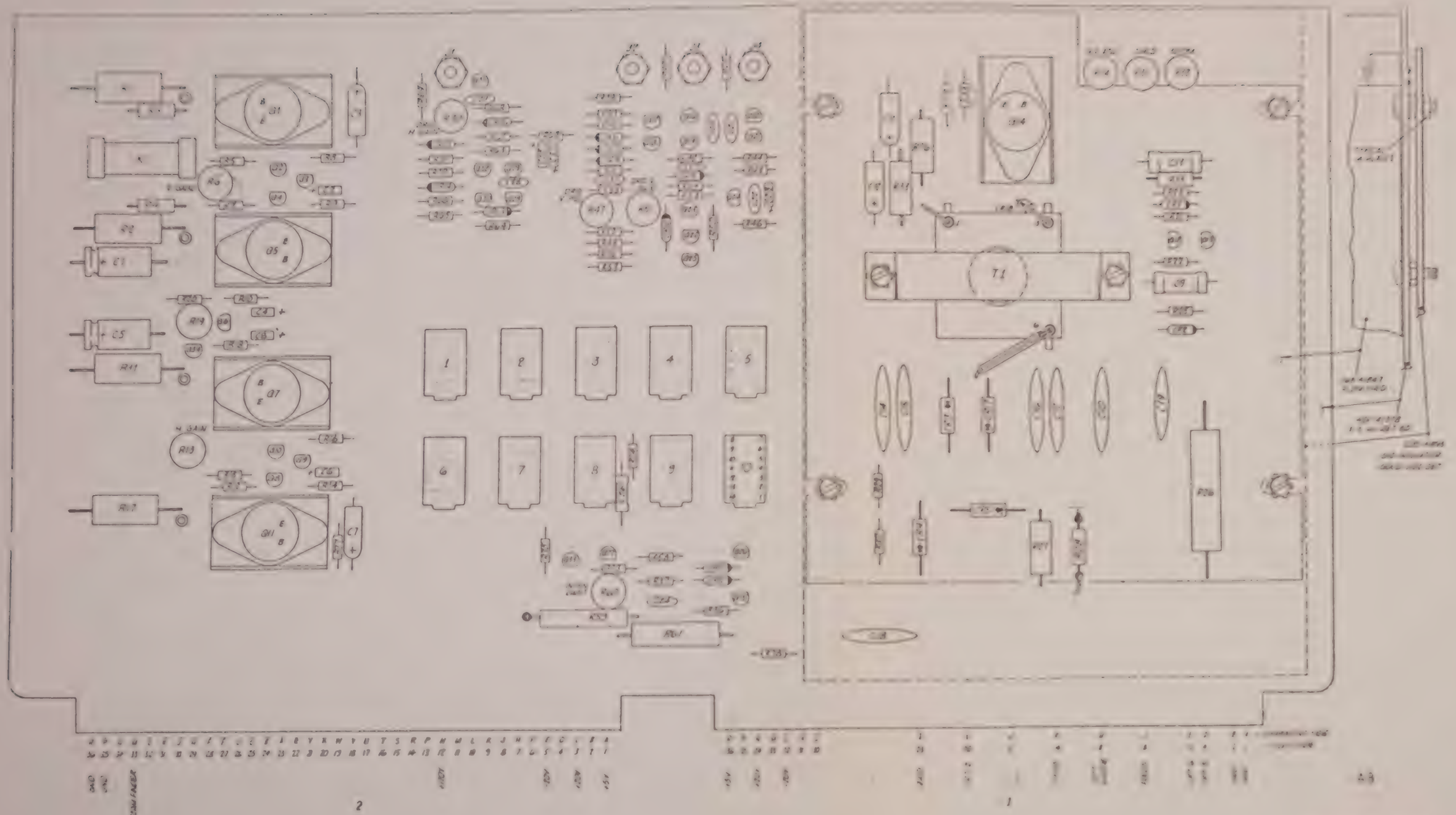

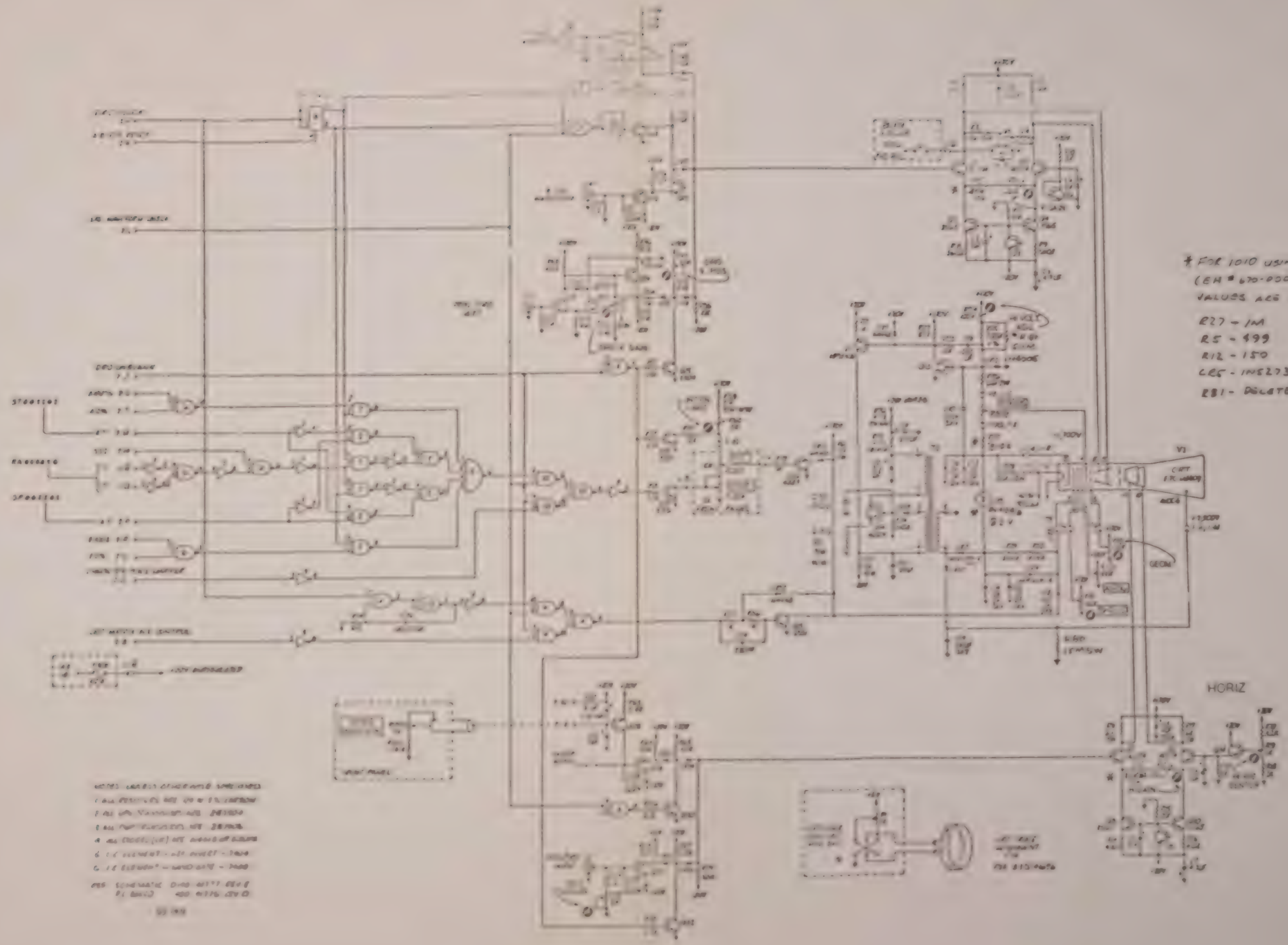
* FOR 1010 USING M1349 CRT (EH # 670-00039) FOLLOWING VALUES ARE CORRECT
R27 - 1M
R5 - 499
R12 - 150
CR5 - 1N5273 (120V)
EB1 - DELETED
V1
HORIZ

SYSTEM 1010
A9 LOW VOLTAGE POWER SUPPLY

Pin	To:	Signal
1		GND
2	T1-8	200 V AC
3		
4	C301(+), Q301-C.	+170 V UNREG
5	Q301-E	+170 V Power
6		
7	Q301-B	+170 V Ref.
8	Q303-C	+12 V UNREG
9	Q304-B	+5 V Ref
10	Q304-C, F102.	+5 V UNREG
11	T1-10.	+15 V AC
12	C303(+).	+12 V UNREG
13	T1-11.	+15 V AC
14	Q304-E, R301-1.	+5 V Power
15	Q305-E.	-20 V Power
16	Q8-2-E.	-20 V Output
17		
18	C302(+)Q302-C.	+20 V UNREG
19		
20	A7-2-C	+20 V Output
21	T1-14.	30 V C.T. AC
22		GND
A		GND
B	T1-9	200 V AC
C	A8-2-N, R201-	+170 V Output
D		
E		
F	R301-2,CR305-2,A8-2-A,I203,I204,R303	+5 V Output
H	Q303-B.	+12 V Ref.
J		
K		
L		
M	C303-(-).	GND
N		
P	CR305-3.	+5 V Crowbar
R	Q305-B.	-20 V Ref.
S		
T		
U	C307(-), R205- Q305-C.	-20 V UNREG
V	Q302-B.	+20 V Ref.
W	Q302-E.	+20 V Power
X		
Y	T1-12.	30 V C.T. AC
Z		GND

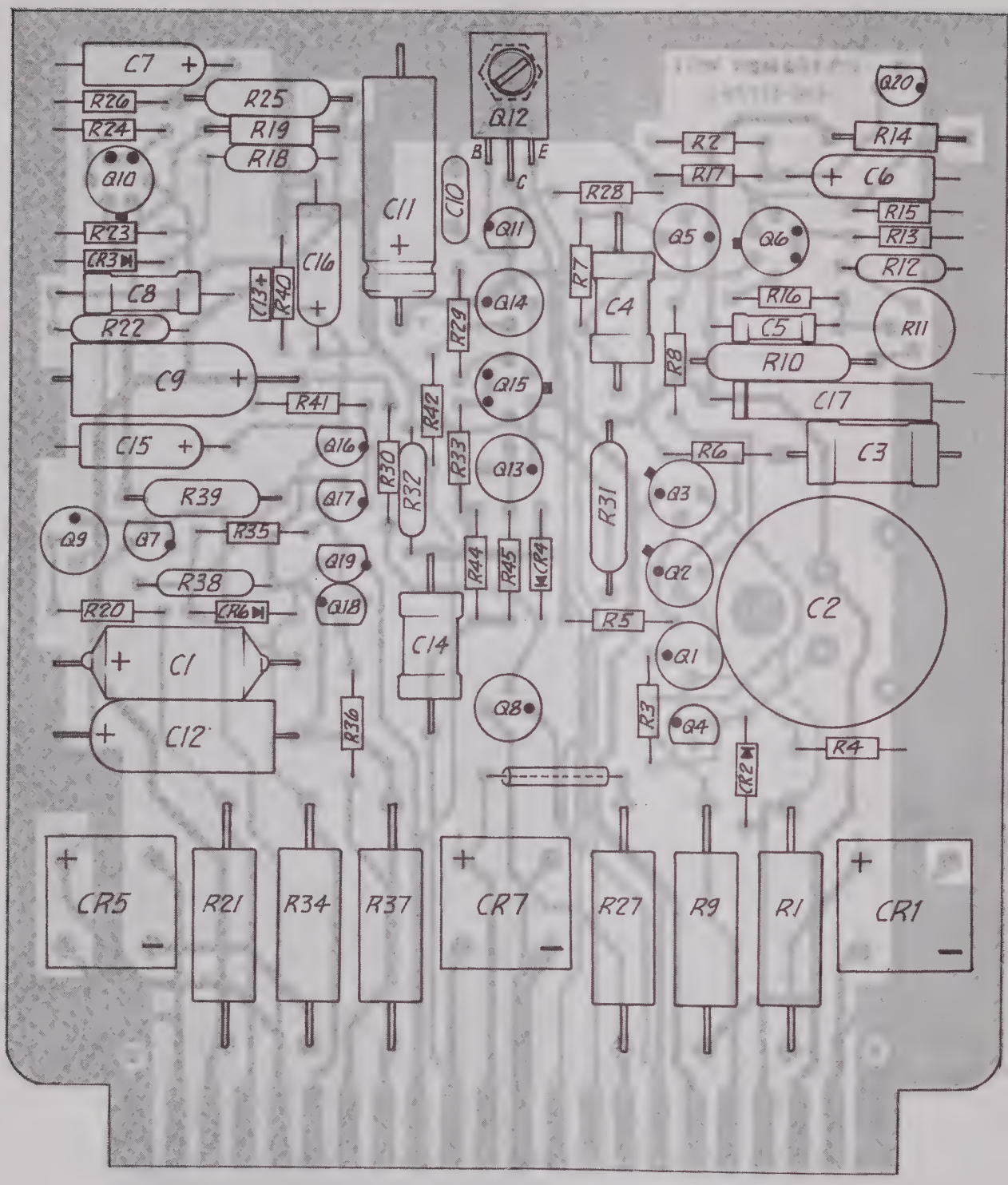
C7
R26
R24
Q10
R23
CR3
C8
R22
C9
C15
R39
Q9
Q7
R38
R20
CR6
C1
C12
R25
R19
R18
C16
R40
C13
R41
Q16
Q17
R35
Q19
Q18
C11
C10
Q12
B
E
C
Q11
Q14
R29
Q15
R42
R30
R32
R33
Q13
R44
R45
CR4
C14
R36
Q8
R28
R7
C4
Q5
Q6
Q20
R14
C6
R15
R13
R12
R16
C5
R11
R8
R10
C17
C3
R6
R31
Q3
Q2
C2
R5
Q1
R3
Q4
CR2
R4
CR5
R21
R34
R37
CR7
R27
R9
R1
CR1
Z Y X W V U T S R P N M L K J H F E D C B A COMP SIDE
22 21 20 19 18 17 16 15 14 13 12 11 10 9 8 7 6 5 4 3 2 1 CIRC SIDE
GND
+10V
-20V
+5V
+17V
GND

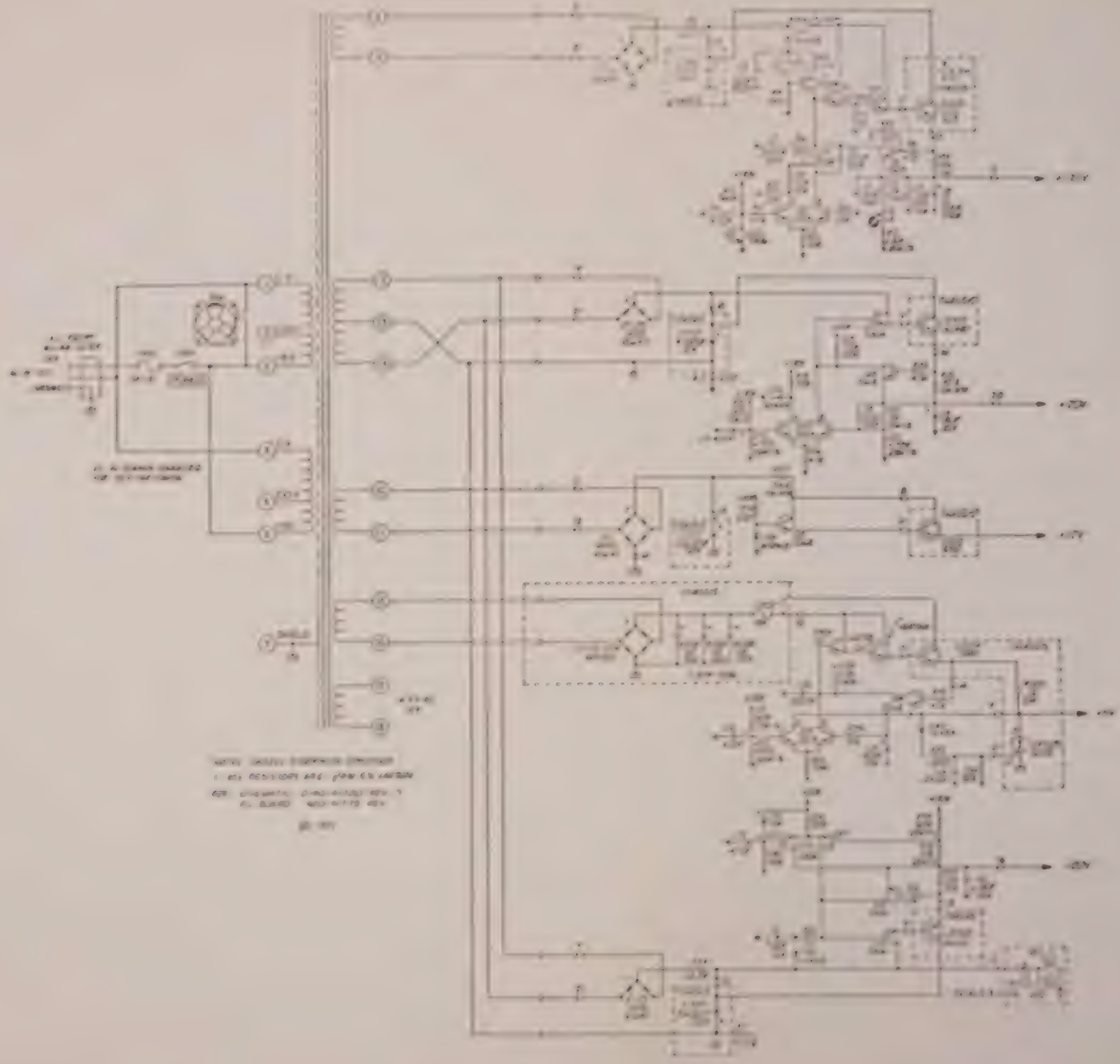

NOTE: [illegible] TO BE ADJUSTED SUCH THAT [illegible] SUPPLY IS WITHIN [illegible] OF NOMINAL

LOW VOLTAGE P/S A9

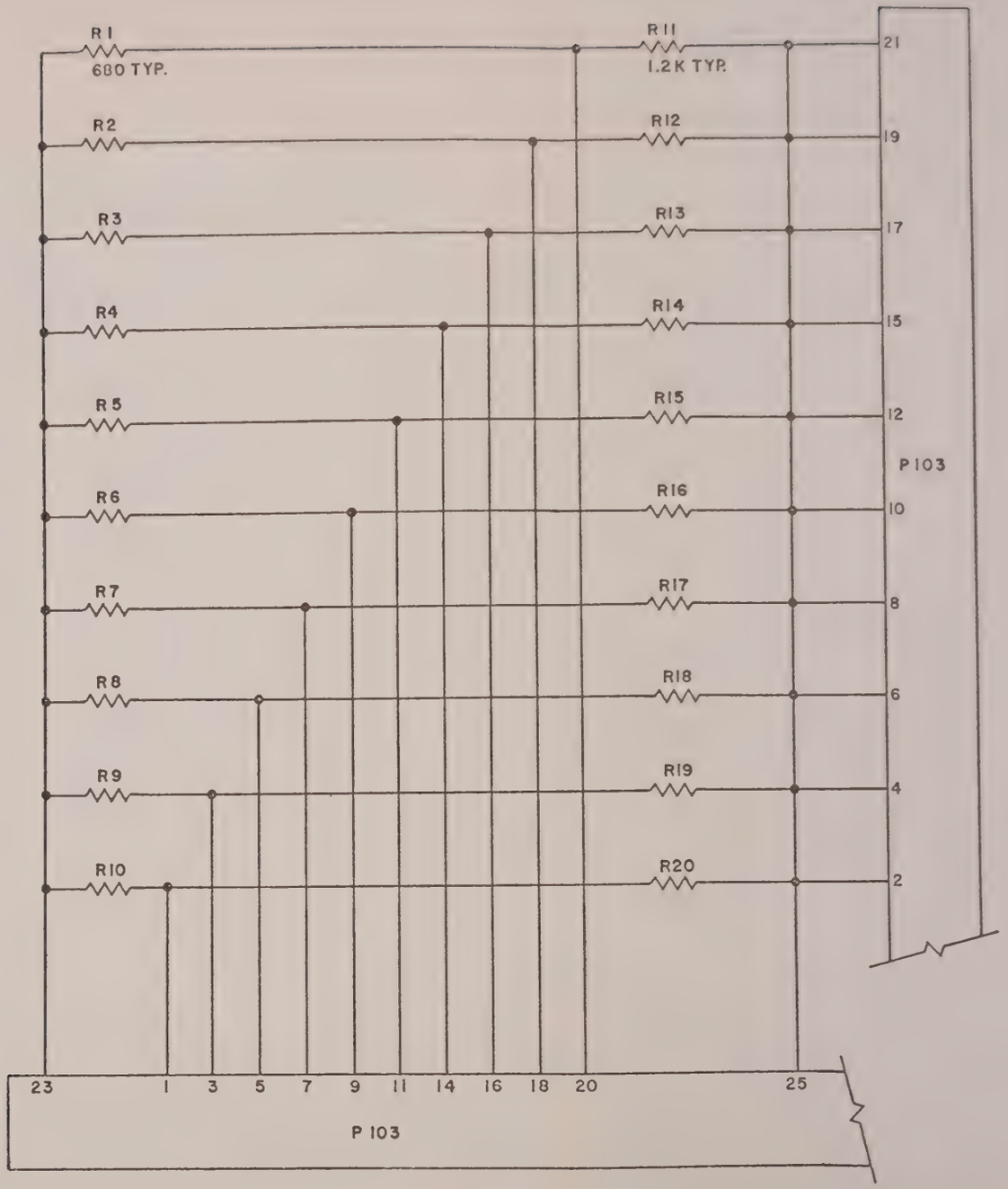

NOTE : (UNLESS OTHERWISE SPECIFIED.)

1. ALL RESISTORS ARE IN OHMS, 1/4W, 5%.
2. REF. DRWG.
   ASSY.: 693-41884

SCHEMATIC
LINE TERMINATOR

SYSTEM 1010
PROGRAM LINES

J102 (IN) & J103 (OUT)

Pin	Signal	Into 1010
1	ASCII Bit 1	XA6-1-L
2	GND	
3	ASCII Bit 2	XA6-1-B
4	GND	
5	ASCII Bit 3	XA6-1-C
6	GND	
7	ASCII Bit 4	XA6-1-M
8	GND	
9	ASCII Bit 5	XA6-1-F
10	GND	
11	ASCII Bit 6	XA6-1-D
12	GND	
13	Ready Flag (J102 only)	XA6-2-$\overline{L}$
14	ASCII Bit 7	XA6-1-9
15	GND	
16	ASCII Bit 8	XA6
17	GND	
18	COMP. Clock	XA6-1-2
19	GND	
20	Key Board Clock	XA6-2-$\overline{M}$
21	GND	
22		
23	+5V	XA9-f
24	COMP. Flag (J102 only)	XA6-2-$\overline{D}$
25	GND	XA9-A

SYSTEM 1010
J106 MULTIPLEX CONNECTOR

Pin	Signal	To
1	1	XA4-1-17
2	2	XA4-1-U
3	4	XA4-1-V
4	8 A Probe	XA4-1-16
5	10	XA4-1-13
6	20	XA4-1-P
7	40	XA4-1-R
8	80	XA4-1-12
9	A x 10 ATTEN	XA2-2-H
10	A x 1 ATTEN	XA2-2-F
11	AES COAX GND	A1-J5
12	AES COAX	A1-J5
13	AES COAX GND	A1-J5
14	A CHOPPER	XA7-1-E
15	BES COAX GND	A1-J8
16	BES COAX	A1-J8
17	BES COAX GND	A1-J8
18		
19	LOGIC GND	XA9-A
20	1	XA4-1-D
21	2	XA4-1-25
22	4	XA4-1-26
23	8	XA4-1-C
24	10	XA4-1-Z
25	20 B Probe	XA4-1-21
26	40	XA4-1-22
27	80	XA4-1-Y
28	B x 10 ATTEN	XA2-1-U
29	B x 1 ATTEN	XA2-1-T
30	AFB COAX GND	A1-J6
31	AFB COAX	A1-J6
32	AFB COAX GND	A1-J6
33	B CHOPPER	XA7-1-H
34	BFB COAX GND	A1-J9
35	BFB COAX	A1-J9
36	BFB COAX GND	A1-J9
37	GND SIG	XA9-A

SYSTEM 1010
J107 (A PROBE)

Pin	Signal	To
A	SIG. GROUND	XA9-A
B	-20 V	XA9-16
C	A CHOPPER	XA7-1-E
D	+20 V	XA9-20
E	+170 V	XA9-C
F	x 10 ATTENUATION	XA2-2-H
H	x 1 ATTENUATION	XA2-2-F
J	COAX GROUND	A1-J11
K	STROBE	A1-J11
L	COAX GROUND	A1-J11
M	FEEDBACK	A1-J6
N	ERROR SIGNAL	A1-J5

J108 (B PROBE)

Pin	Signal	To
A	SIGNAL GROUND	XA9-A
B	-20 V	XA9-16
C	B CHOPPER	XA7-1-H
D	+20 V	XA9-20
E	+170 V	XA9-C
F	x 10 ATTENUATION	XA7-1-U
H	x 1 ATTENUATION	XA7-1-T
J	COAX GROUND	A1-J12
K	STROBE	A1-J12
L	COAX GROUND	A1-J12
M	FEEDBACK	A1-J9
N	ERROR SIGNAL	A1-J8

SYSTEM 1010
J109 COMPUTER CONTROL

Pin	Signal	To
1		
2		
3		
4	DRO Output 1	XA6-2-R
5	2	XA6-2-S
6	3	XA6-2-M
7	4	XA6-2-P
8	5	XA6-2-L
9	6	XA6-2-J
10		
11	End of Program	XA6-1-31
12		
13		
14		
15	Meas. in Progress	XA5-1-U
16		
17		
18	GND	XA9-A
19	Data Clock	XA6-2-$\overline{C}$
20		
21		
22	Remote Single Meas.	XA5-1-$\overline{B}$, S3
23		
24		
25	Not Preset	F.P. I204
26		
27		
28	Data Gate	XA6-2-V
29		
30	Prog. Output Command	XA6-2-$\overline{B}$
31		
32		
33		
34		
35	+5 V	XA9-F
36		
37	GND	XA9-A

SYSTEM 1010
REAR PANEL

From		To
J101	115 V AC	
J104	TRIGGER INPUT	S211
J105	MEASUREMENT IN PROGRESS	XA5-1-U

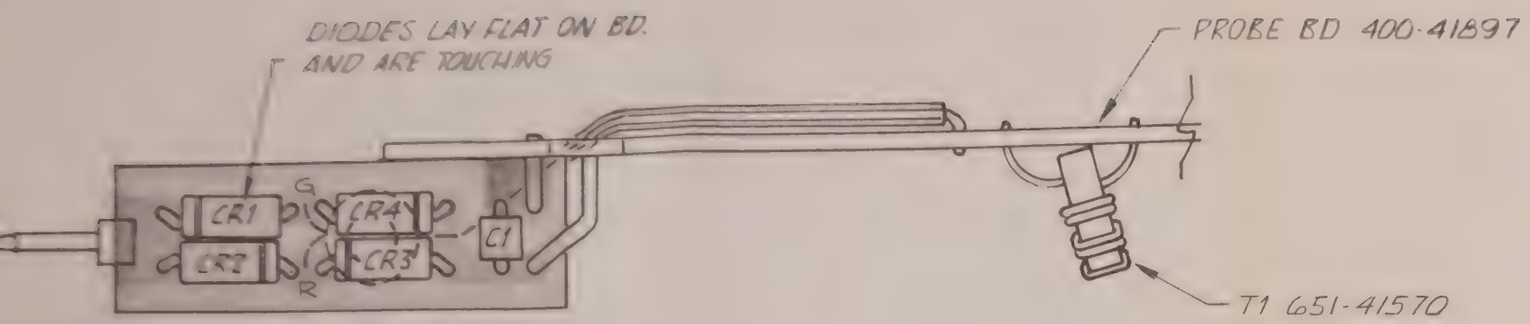

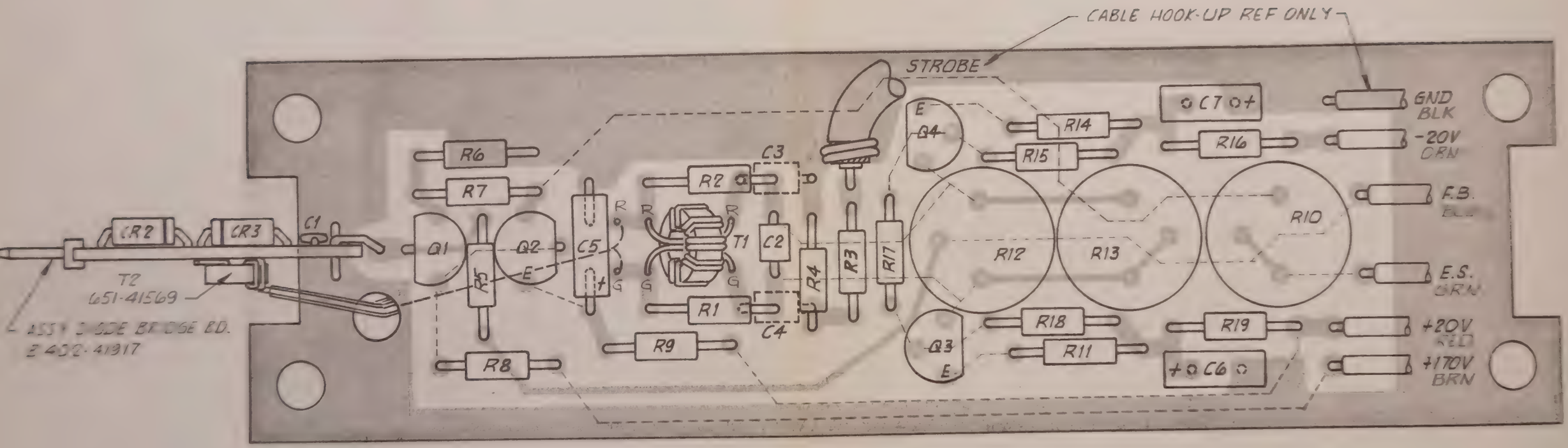

ASSEMBLY P.C. BOARD
PROBE

C-402-41899A

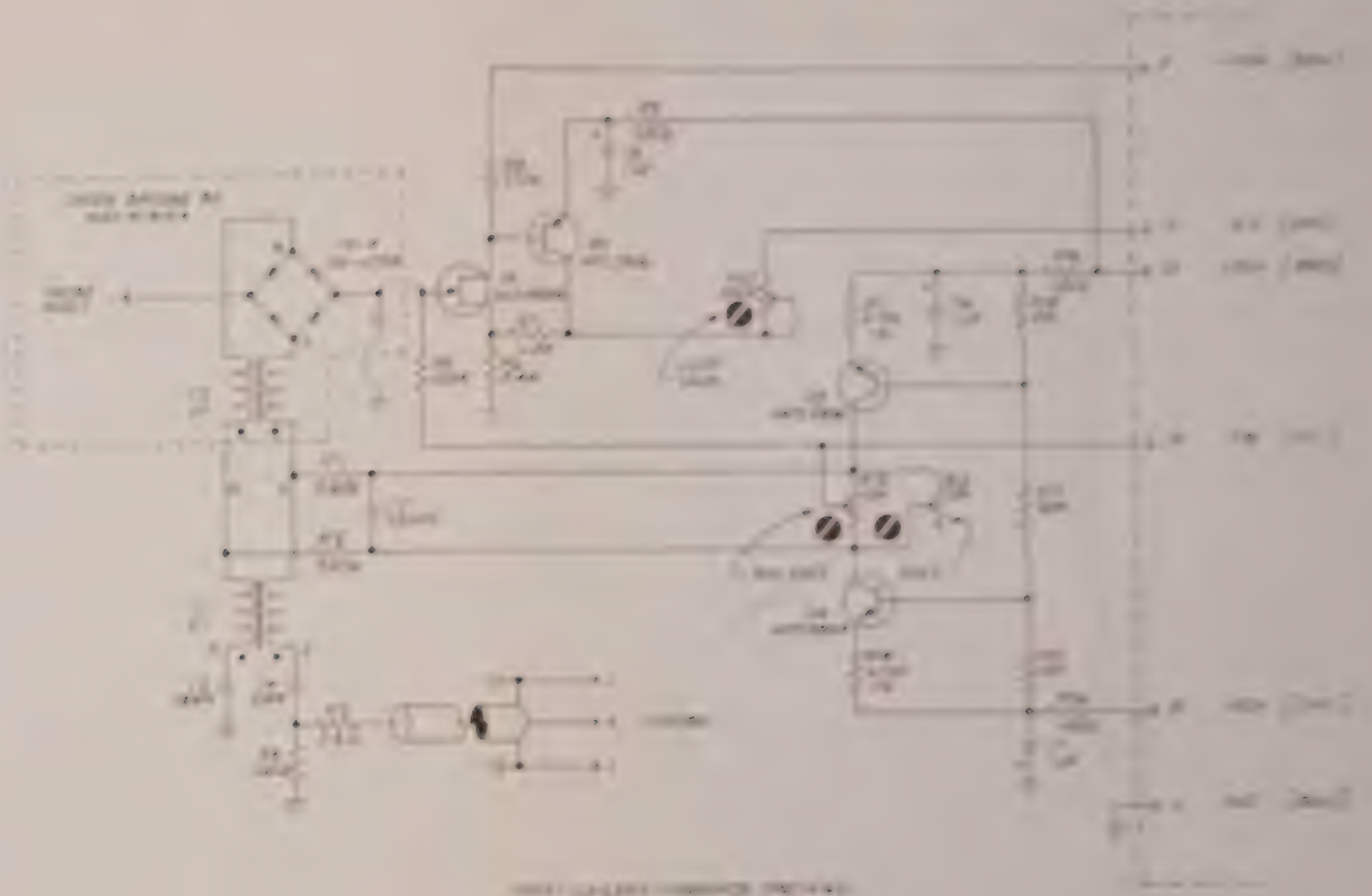

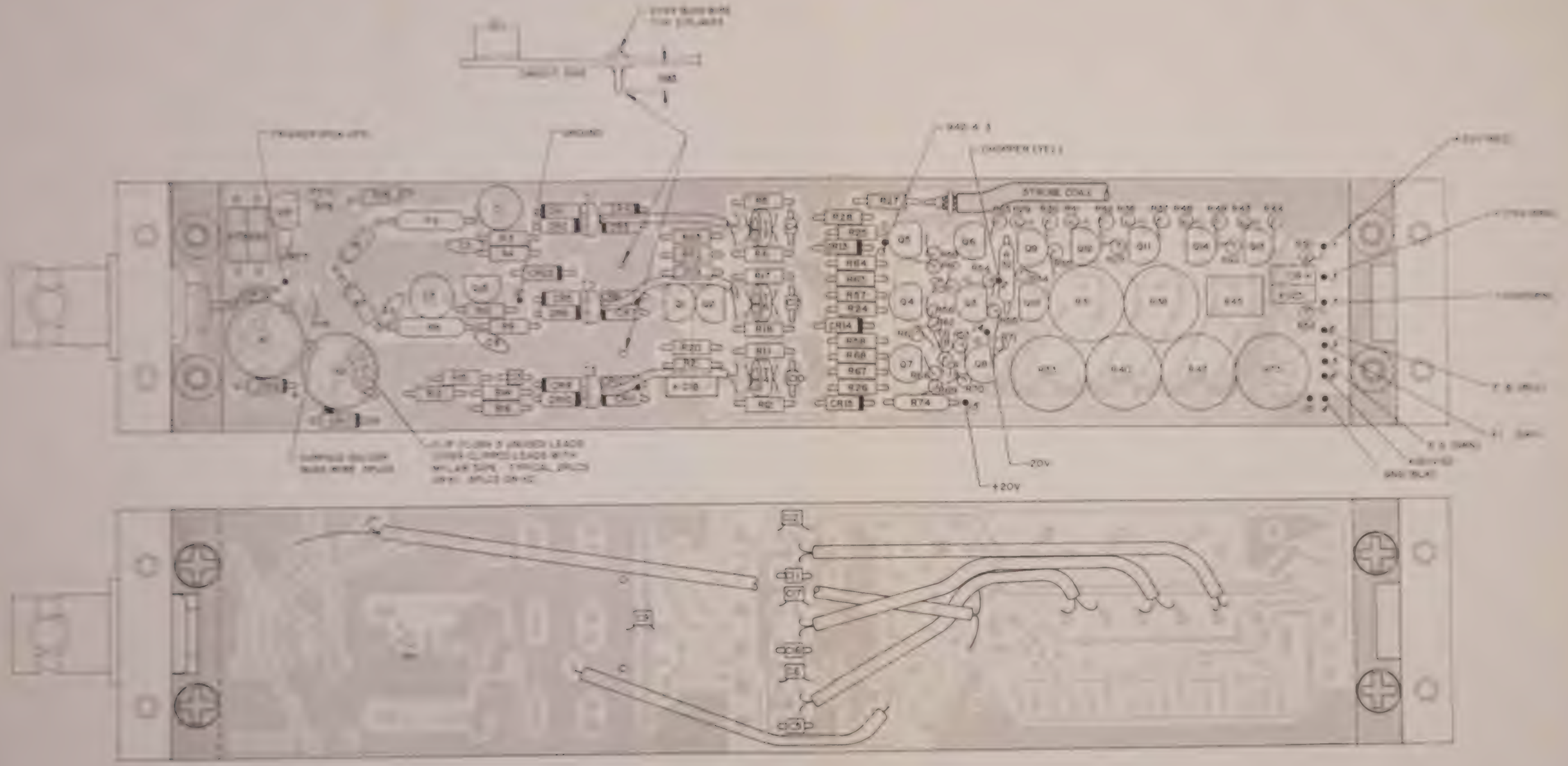

ASSEMBLY
REMOTE SAMPLING UNIT

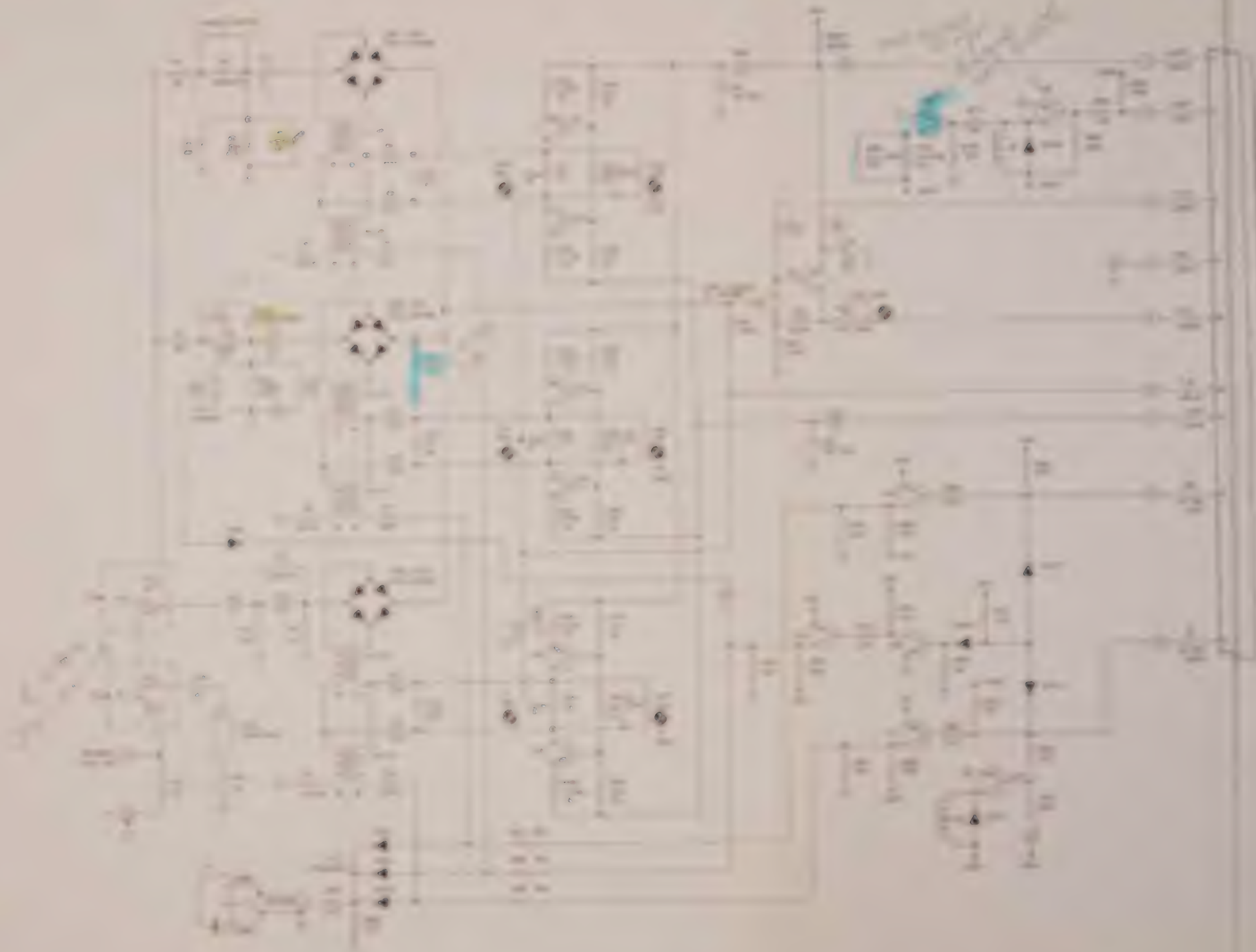

MODEL 1011
A1 J1 PROGRAM INPUT

Pin	To:	Signal
1	J103-1	A-Probe No. 1
2	J103-2	A-Probe No. 2
3	J103-3	A-Probe No. 4
4	J103-4	A-Probe No. 8
5	J103-5	A-Probe No. 10
6	J103-6	A-Probe No. 20
7	J103-7	A-Probe No. 40
8	J103-8	A-Probe No. 80
9	J103-9	A X10 Atten
10	J103-10	A X1 Atten
11	J103-14	A Chopper
12	J103-19	Logic GND
13	J103-33	B Chopper
14	J103-29	B X1 Atten
15	J103-28	B X10 Atten
16	J103-27	B-Probe No. 80
17	J103-26	B-Probe No. 40
18	J103-25	B-Probe No. 20
19	J103-24	B-Probe No. 10
20	J103-23	B-Probe No. 8
21	J103-22	B-Probe No. 4
22	J103-21	B-Probe No. 2
23	J103-20	B-Probe No. 1
24		
25		
26		

MODEL 1011
A1 J2 RELAY

Pin	To:	Signal
1	A3J45-1	AD1
2	A3J45-2	BD1
3	A3J45-3	$\overline{A0}$
4	A3J45-4	$\overline{B9}$
5	A3J45-5	$\overline{A1}$
6	A3J45-6	$\overline{B8}$
7	A3J45-7	$\overline{A2}$
8	A3J45-8	$\overline{B7}$
9	A3J45-9	$\overline{A3}$
10	A3J45-10	$\overline{B6}$
11	A3J45-11	$\overline{A4}$
12	A3J45-12	$\overline{B5}$
13	A3J45-13	$\overline{A5}$
14	A3J45-14	$\overline{B4}$
15	A3J45-15	$\overline{A6}$
16	A3J45-16	$\overline{B3}$
17	A3J45-17	$\overline{A7}$
18	A3J45-18	$\overline{B2}$
18	A3J45-19	$\overline{A8}$
20	A3J45-20	$\overline{B1}$
21	A3J45-21	$\overline{A9}$
22	A3J45-22	$\overline{B0}$
23	A3J45-23	AD2
24		+12V
25	A3J45-25	BD2
26	A3J45-26	+12V

MODEL 1011
A1 J3 FP PROBE

Pin	To:	Signal
1	S202-BR7	B30
2	S202-BR3	B40
3	S202-BR2	B20
4	S202-BR8	B50
5	S202-BR6	B10
6	S202-BR4	B60
7	S202-BR1	B00
8	S202-BF3	
9	S202-BR9	B70
10	S202-BF7	
11	S202-BR5	B80
12		
13	S202-BR10	B90
14		
15	S202-AR4	A60
16	S202-AF7	
17	S202-AR8	A50
18	S202-AF3	
19	S202-AR3	A40
20	S202-AR10	A90
21	S202-AR7	A30
22	S202-AR5	A80
23	S202-AR2	A20
24	S202-AR9	A70
25	S202-AR6	A10
26	S202-AR1	A00

MODEL 1011
A1 J4 STROBE

Pin	To:	Signal
1	A2J22-1	GND
2	A2J22-2	+5V
3	A2J22-3	-20V
4	A2J22-4	-20V
5	A2J22-5	+20V
6	A2J22-6	+20V
7	A2J22-7	$\overline{19}$
8	A2J22-8	$\overline{00}$
9	A2J22-9	$\overline{18}$
10	A2J22-10	$\overline{01}$
11	A2J22-11	$\overline{17}$
12	A2J22-12	$\overline{02}$
13	A2J22-13	$\overline{16}$
14	A2J22-14	$\overline{03}$
15	A2J22-15	$\overline{15}$
16	A2J22-16	$\overline{04}$
17	A2J22-17	$\overline{14}$
18	A2J22-18	$\overline{05}$
19	A2J22-19	$\overline{13}$
20	A2J22-20	$\overline{06}$
21	A2J22-21	$\overline{12}$
22	A2J22-22	$\overline{07}$
23	A2J22-23	$\overline{11}$
24	A2J22-24	$\overline{08}$
25	A2J22-25	$\overline{10}$
26	A2J22-26	$\overline{09}$

MODEL 1011
A1 J5 X10 ATTEN

Pin	To:	Signal
1	J00-F	$\overline{X10}$ ATTEN
2	J01-F	$\overline{X10}$ ATTEN
3	J02-F	$\overline{X10}$ ATTEN
4	J03-F	$\overline{X10}$ ATTEN
5	J04-F	$\overline{X10}$ ATTEN
6	J05-F	$\overline{X10}$ ATTEN
7	J06-F	$\overline{X10}$ ATTEN
8	J07-F	$\overline{X10}$ ATTEN
9	J08-F	$\overline{X10}$ ATTEN
10	J09-F	$\overline{X10}$ ATTEN
11	J10-F	$\overline{X10}$ ATTEN
12	J11-F	$\overline{X10}$ ATTEN
13	J12-F	$\overline{X10}$ ATTEN
14	J13-F	$\overline{X10}$ ATTEN
15	J14-F	$\overline{X10}$ ATTEN
16	J15-F	$\overline{X10}$ ATTEN
17	J16-F	$\overline{X10}$ ATTEN
18	J17-F	$\overline{X10}$ ATTEN
19	J18-F	$\overline{X10}$ ATTEN
20	J19-F	$\overline{X10}$ ATTEN
21		
22		
23		
24		
25		
26		

MODEL 1011
A1 J6 X1 ATTEN

Pin	To:	Signal
1	J00-H	$\overline{X1}$ ATTEN
2	J01-H	$\overline{X1}$ ATTEN
3	J02-H	$\overline{X1}$ ATTEN
4	J03-H	$\overline{X1}$ ATTEN
5	J04-H	$\overline{X1}$ ATTEN
6	J05-H	$\overline{X1}$ ATTEN
7	J06-H	$\overline{X1}$ ATTEN
8	J07-H	$\overline{X1}$ ATTEN
9	J08-H	$\overline{X1}$ ATTEN
10	J09-H	$\overline{X1}$ ATTEN
11	J10-H	$\overline{X1}$ ATTEN
12	J11-H	$\overline{X1}$ ATTEN
13	J12-H	$\overline{X1}$ ATTEN
14	J13-H	$\overline{X1}$ ATTEN
15	J14-H	$\overline{X1}$ ATTEN
16	J15-H	$\overline{X1}$ ATTEN
17	J16-H	$\overline{X1}$ ATTEN
18	J17-H	$\overline{X1}$ ATTEN
19	J18-H	$\overline{X1}$ ATTEN
20	J19-H	$\overline{X1}$ ATTEN
21		
22		
23		
24		
25		
26		

MODEL 1011
A1 J7 CHOPPER GATE

Pin	To:	Signal
1	J00-C	chopper
2	J01-C	chopper
3	J02-C	chopper
4	J03-C	chopper
5	J04-C	chopper
6	J05-C	chopper
7	J06-C	chopper
8	J07-C	chopper
9	J08-C	chopper
10	J09-C	chopper
11	J10-C	chopper
12	J11-C	chopper
13	J12-C	chopper
14	J13-C	chopper
15	J14-C	chopper
16	J15-C	chopper
17	J16-C	chopper
18	J17-C	chopper
19	J18-C	chopper
20	J19-C	chopper
21		
22		
23		
24		
25		
26		

MODEL 1011
A1 J8 POWER

Pin	To:	Signal
1		GND
2		GND
3		+12V
4		+20V
5		-20V
6	+5V	+5V
7		+5V
8		+5V
9		+5V
10		-20V
11		+20V
12		+12V
13		GND
14		GND

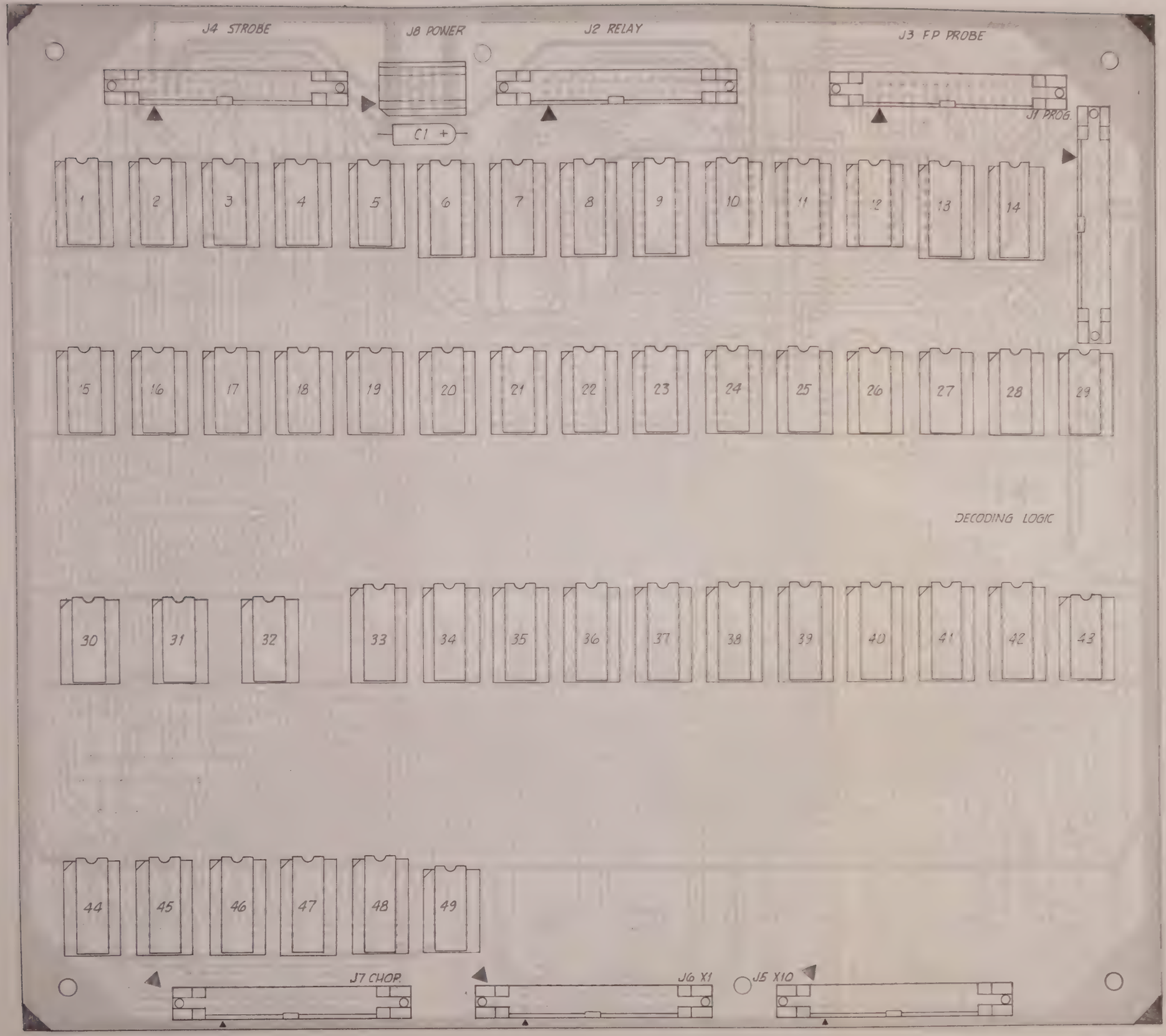

DECODING LOGIC A1

ASSEMBLY P.C. BOARD
DECODING LOGIC
— 1011
402-
D-41920 C

MODEL 1011
A2 J22

Pin	To:	Signal
1	A1J4-1	GND
2	A1J4-2	+5V
3	A1J4-3	-20V
4	A1J4-4	-20V
5	A1J4-5	+20V
6	A1J4-6	+20V
7	A1J4-7	$\overline{19}$
8	A1J4-8	$\overline{00}$
9	A1J4-9	$\overline{18}$
10	A1J4-10	$\overline{01}$
11	A1J4-11	$\overline{17}$
12	A1J4-12	$\overline{02}$
13	A1J4-13	$\overline{16}$
14	A1J4-14	$\overline{03}$
15	A1J4-15	$\overline{15}$
16	A1J4-16	$\overline{04}$
17	A1J4-17	$\overline{14}$
18	A1J4-18	$\overline{05}$
19	A1J4-19	$\overline{13}$
20	A1J4-20	$\overline{06}$
21	A1J4-21	$\overline{12}$
22	A1J4-22	$\overline{07}$
23	A1J4-23	$\overline{11}$
24	A1J4-24	$\overline{08}$
25	A1J4-25	$\overline{10}$
26	A1J4-26	$\overline{09}$

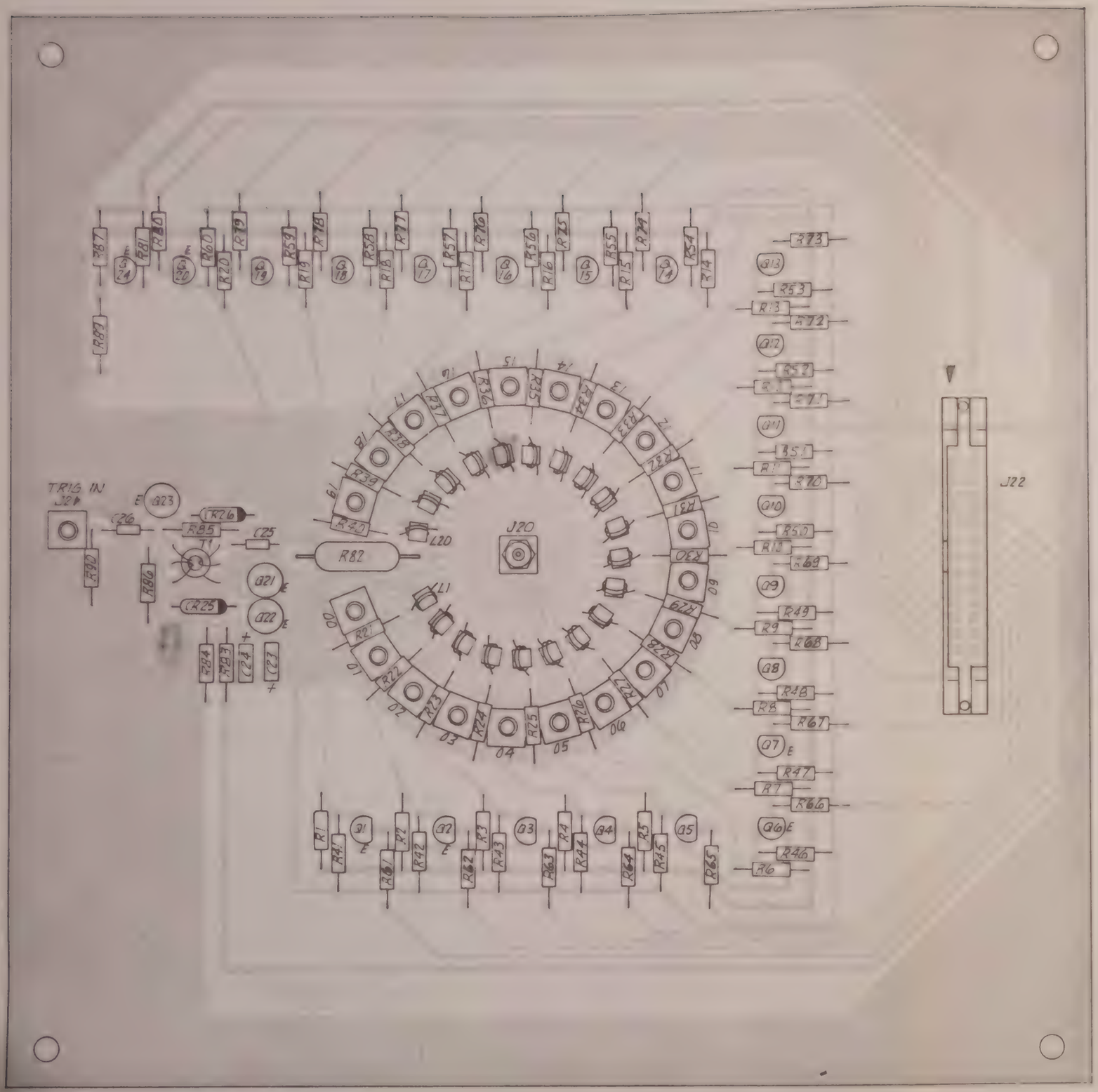

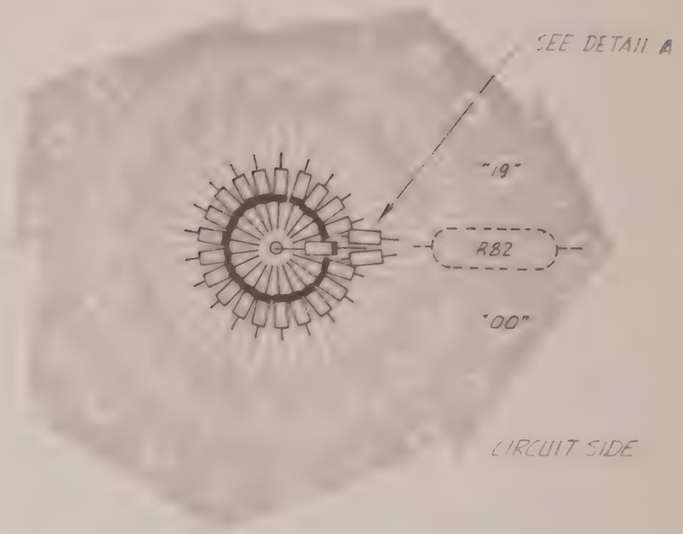

CIRCUIT SIDE

DETAIL A

STROBE SWITCH A2

ASSEMBLY P.C. BD.
STROBE SWITCH

MODEL 1011
D-402-41904 A

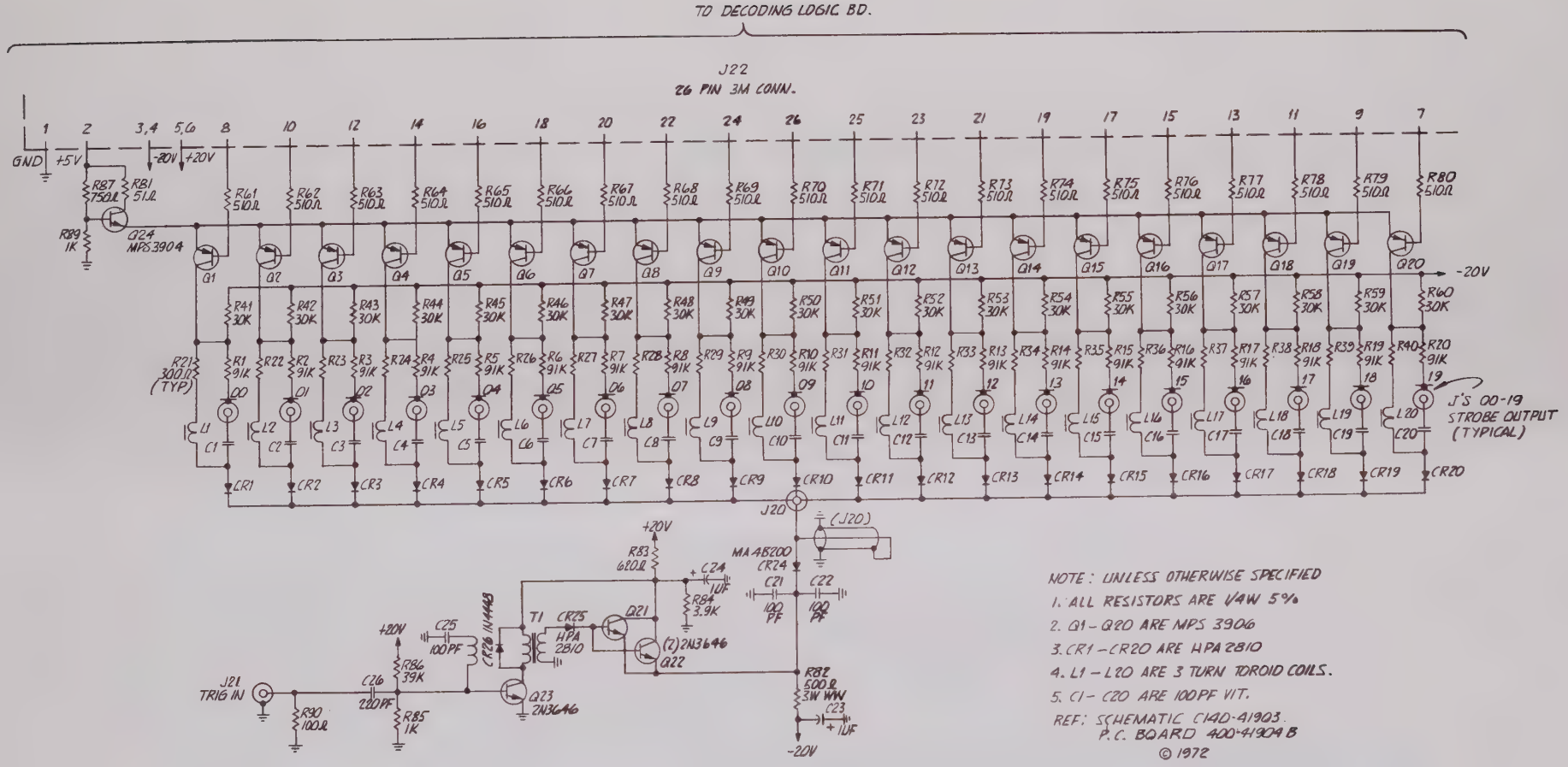

NOTE: UNLESS OTHERWISE SPECIFIED
1. ALL RESISTORS ARE 1/4W 5%
2. Q1 - Q20 ARE MPS 3906
3. CR1 - CR20 ARE HPA 2810
4. L1 - L20 ARE 3 TURN TOROID COILS.
5. C1 - C20 ARE 100PF V.I.T.

REF: SCHEMATIC C140-41903.
P.C. BOARD 400-41904 B

© 1972

STROBE SWITCH A2

SCHEMATIC P.C. BD.

STROBE SWITCH

1011

140-41903 C

MODEL 1011
A3 J45

Pin	To:	Signal
1	A1J-1	AD1
2	A1J-2	BD1
3	A1J-3	$\overline{A0}$
4	A1J-4	$\overline{B9}$
5	A1J-5	$\overline{A1}$
6	A1J-6	$\overline{B8}$
7	A1J-7	$\overline{A2}$
8	A1J-8	$\overline{B7}$
9	A1J-9	$\overline{A3}$
10	A1J-10	$\overline{B6}$
11	A1J-11	$\overline{A4}$
12	A1J-12	$\overline{B5}$
13	A1J-13	$\overline{A5}$
14	A1J-14	$\overline{B4}$
15	A1J-15	$\overline{A6}$
16	A1J-16	$\overline{B3}$
17	A1J-17	$\overline{A7}$
18	A1J-18	$\overline{B2}$
19	A1J-19	$\overline{A8}$
20	A1J-20	$\overline{B1}$
21	A1J-21	$\overline{A9}$
22	A1J-22	$\overline{B0}$
23	A1J-23	AD2
24		
25	A1J-25	BD2
26	A1J-26	+12V

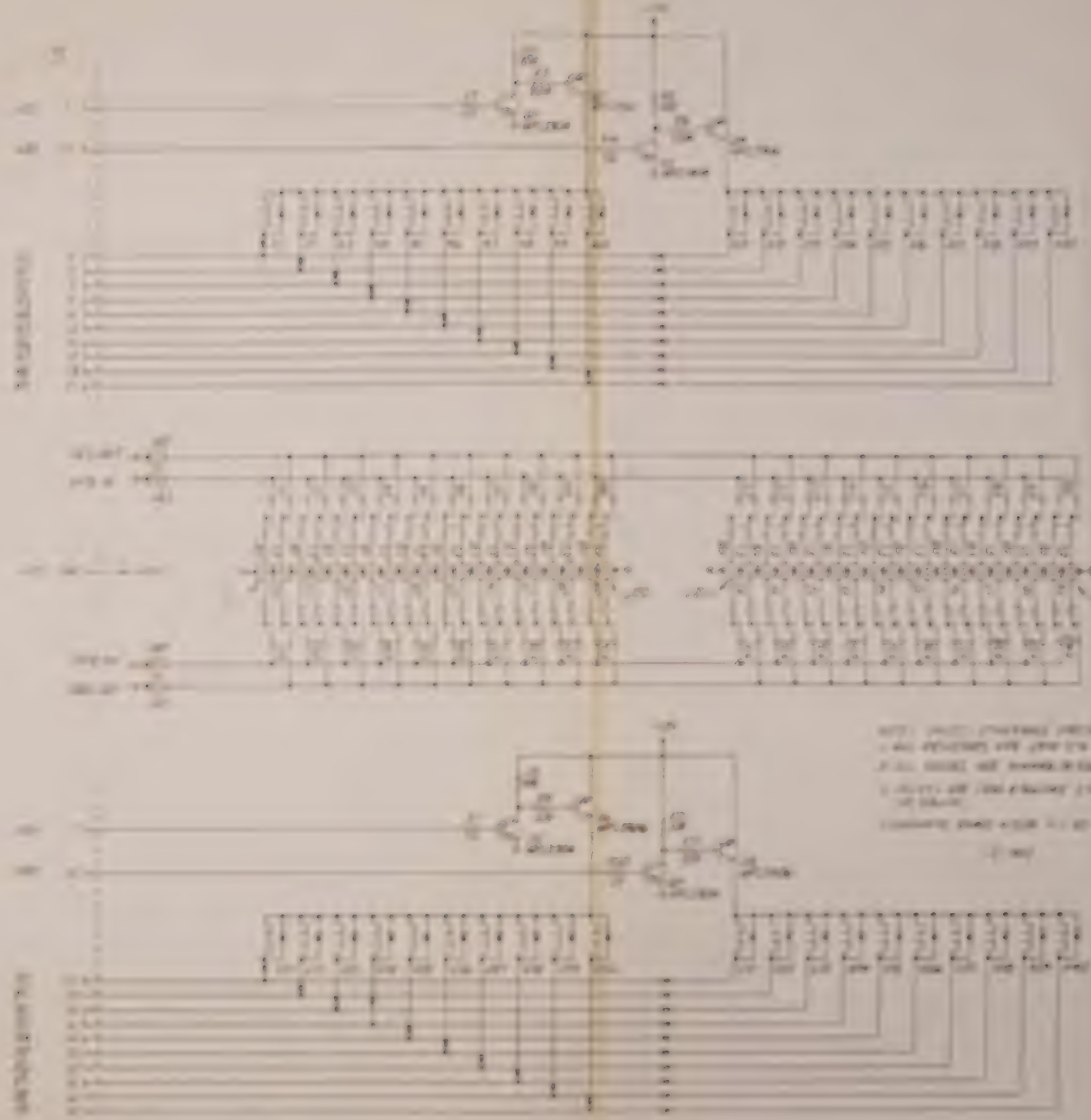

RELAY BOARD A3

MODEL 1011
A4 LOW VOLTAGE P/S
J301

Pin	To:	Signal
1	J301-A, C303-	GND
2	T301-8	200 VAC
3		
4	C301 +, Q301-C	+170V UNREG
5	Q301-E	+170V POWER
6		
7	Q301-B	+170V Ref.
8	Q304-C	+12V UNREG
9	Q302-B	+5V Ref.
10		
11	T301-13	+15 VAC
12	R302	+5V UNREG
13	T301-14	+15 VAC
14	Q302-E	+5V POWER
15	Q305-E	-20V POWER
16	Q18-E, J19B(front panel)	-20V Output
17		
18	C303 +, Q303-C	+20V UNREG
19		
20	J19D(front panel)	+20V Output
21	T301-10	30V C.T. AC
22	T301-9, C305 +, J301-M, J301-Z	GND

MODEL 1011
A4 LOW VOLTAGE P/S
J301

Pin	To:	Signal
A	J301-1	GND
B	T301-12	200 VAC
C	J19E(front panel)	+170V Output
D		
E		
F	R301	+5V Output
H	Q304-B	+12V Ref.
J		
K		
L	Q304-E	+12V Output
M	J301-22	GND
N		
P	C304 +	+12V UNREG
R	Q305-B	-20V Ref.
S		
T		
U	C305 -, Q305-C	-20V UNREG
V	Q303-B	+20V Ref.
W	Q303-E	+20V Power
X		
Y	T301-8	30V C.T. AC
Z	J301-22	GND

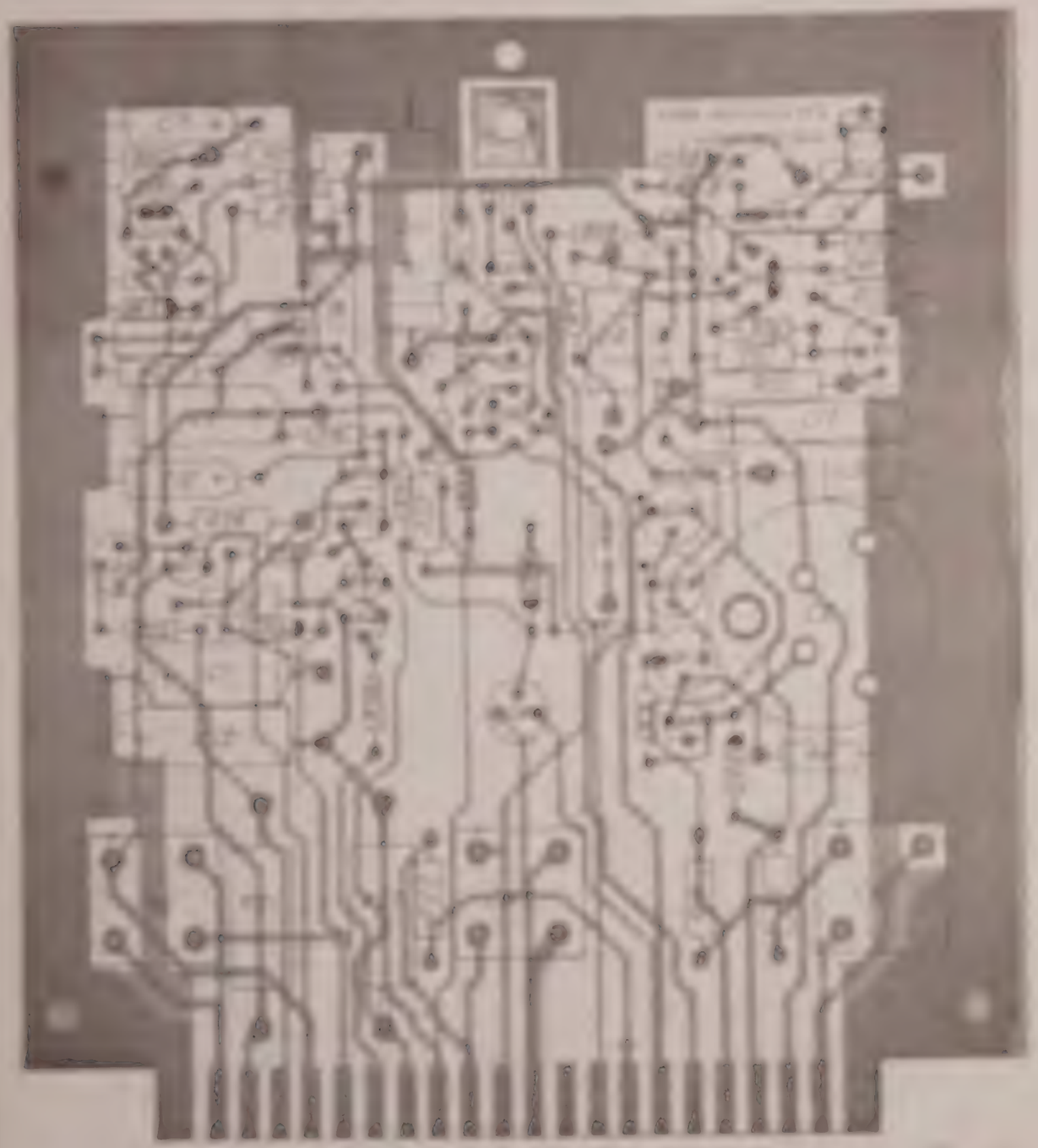

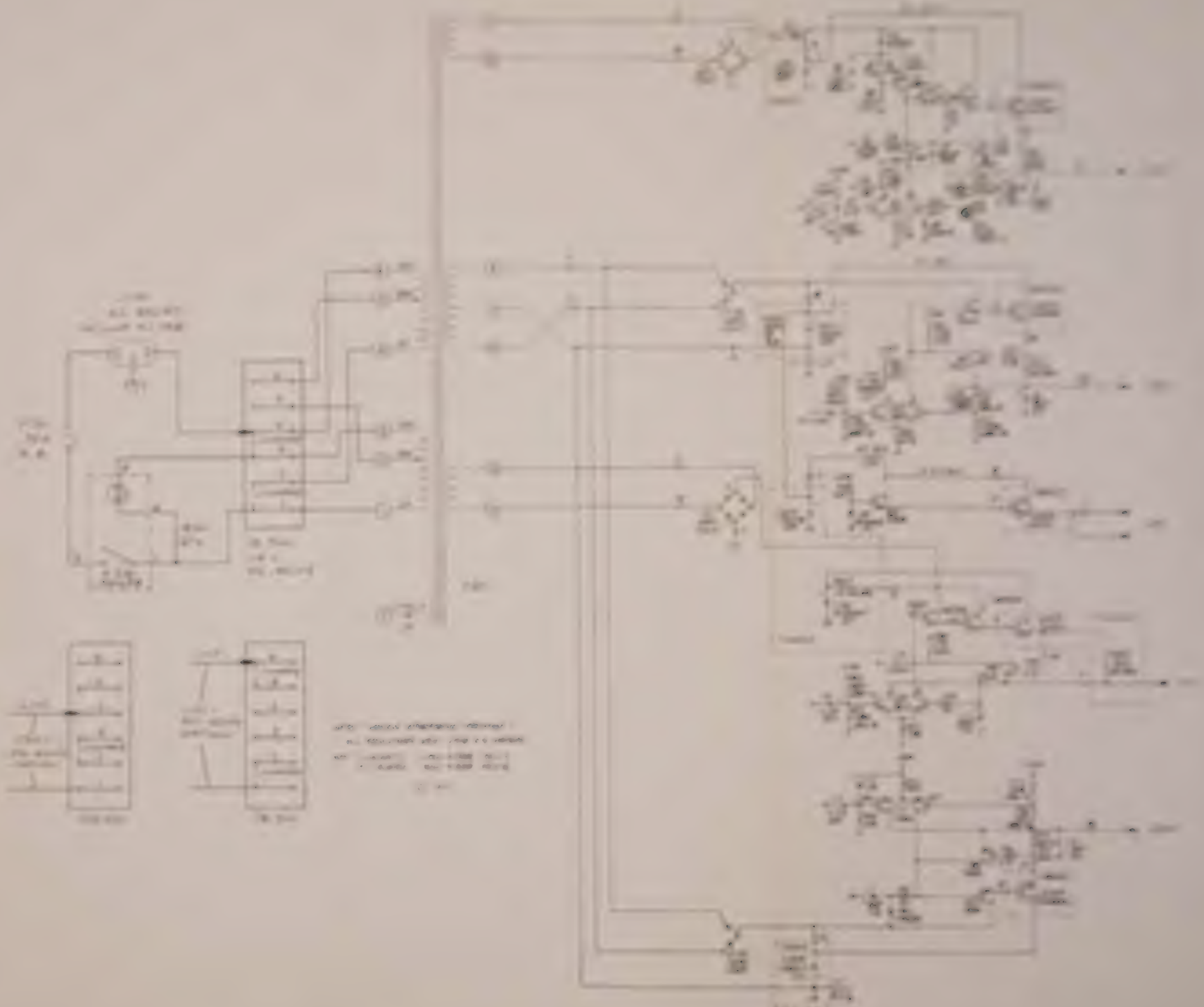

MODEL 1011
PROGRAM LINES
J102 (IN) AND J103 (OUT)

Pin	To:	Signal
1	A1J1-1	A Probe No. 1
2	A1J1-2	A Probe No. 2
3	A1J1-3	A Probe No. 4
4	A1J1-4	A Probe No. 8
5	A1J1-5	A Probe No. 10
6	A1J1-6	A Probe No. 20
7	A1J1-7	A Probe No. 40
8	A1J1-8	A Probe No. 80
9	A1J1-9	A X10 Atten
10	A1J1-10	A X1 Atten
11		AES GND
12	A3J42	AES
13		AES GND
14	A1J1-11	A chopper
15		BES GND
16	A3J41	BES
17		BES GND
18		
19	A1J1-12	Logic GND
20	A1J1-23	B Probe No. 1
21	A1J1-22	B Probe No. 2
22	A1J1-21	B Probe No. 4
23	A1J1-20	B Probe No. 8
24	A1J1-19	B Probe No. 10
25	A1J1-18	B Probe No. 20
26	A1J1-17	B Probe No. 40
27	A1J1-16	B Probe No. 80
28	A1J1-15	B X10 Atten
29	A1J1-14	B X1 Atten
30		AFB GND
31	A3J43	AFB
32		AFB GND
33	A1J1-13	B chopper
34		BFB GND
35	A3J44	BFB
36		BFB GND
37	J19A(front panel)	Signal GND

MODEL 1011
REAR PANEL

From	To:	Signal
J101	F101, S201	AC input
J104	A2J21	Trigger Input

APPENDIX A
OLDER SYSTEM 1010's
WITH MODIFIED OLDER A6 BOARD

1-1 GENERAL

This appendix provides only parts lists, board drawings, and schematics for units made before approximately May 1975. These units have the older A6 board (with only 60 IC's) which may have been modified.

Sections 1 through 4 of the basic manual apply to these units as well as to other units. Units with the modified A6 board are occasionly referred to as "OLD UNITS".

SECTION 5
PARTS LIST

5-1. ORDERING INFORMATION

Replacement parts may be ordered through an E-H Representative or directly from the factory. To be certain of receiving the proper parts, always include the following information with the order:

a. Model number and serial number of the instrument

b. Circuit reference number and subassembly name, if applicable, for which the part is intended. If the part does not have a circuit reference, the description from the parts list should be used.

c. E-H part number.

The warranty is given on page ii of this manual. For factory repair, contact the Customer Service Department of E-H Research Laboratories, Inc., at the address given on the title page of this manual. Include the following information:

a. Model number and serial number of the instrument on which the work is to be performed.

b. Details concerning the nature of the malfunction; or, type of repair desired.

5-2. HOW TO USE THIS PARTS LIST

The parts list is divided into subsections corresponding to the physical subsections of the instrument (printed circuit boards, chassis and subassemblies, miscellaneous hardware). Component locations can be determined from the schematic diagrams; each component appears only once in the parts list. At the beginning of each subsection are listed part numbers for any complete subassemblies in that category that are available as replacement parts. These subassemblies may include individually-listed components; care should be taken to locate malfunctions to the lowest possible level of replacement part and thus avoid the time and cost involved in "over-repair".

CIRCUIT REFERENCE	DESCRIPTION	E-H PART NO.
5-3 REAR PANEL ASSEMBLY		253-41861
F101	Fuse Holder	396-00001
F101	Fuse,3A,SB	398-00003
F102	Fuse Holder	396-00001
F102	Fuse,10A,Fast	398-00303
J101	Filter,RFI	000-00000
J102	Conn,25 Pin	700-00303
J103	Conn,25 Pin	700-00303
J104	Conn,BNC	721-00013
J105	Conn,BNC	721-00013
J109	Conn,37 Pin	700-00306
5-4 CRT ASSEMBLY		671-41865
L201	Socket,Light	495-00057
L201	Light,28V	510-00019
L202	Socket,Light	495-00057
L202	Light,28V	510-00019
P31	Electron Tube	670-00000

CIRCUIT REFERENCE	DESCRIPTION	E-H PART NO.
5-5 SAMPLER BOARD ASSEMBLY		401-41754
C1	Cap,470pF	311-00335
C2	Cap,1uF	318-00306
C3	Cap,470pF	311-00335
C4	Cap,1uF	318-00306
C5	Cap,.082uF	000-00000
C6	Cap,.0047uF	311-00315
C7	Cap,.0022uF	311-00309
C8	Cap,1uF	318-00306
C9	Cap,100pF,DM15	311-00353
C10	Cap,1uF	318-00306
C11	Cap,1uF	318-00306
C12	Cap,100pF,Vit	000-00000
C13	Cap,10pF,Vit	311-00087
C14	Cap,10pF,Vit	311-00087
C15	Cap,1uF	318-00306
C16	Cap,10pF,Vit	311-00087
C17	Cap,1uF	318-00306

CIRCUIT REFERENCE	DESCRIPTION	E-H PART NO.
C18	Cap,.001uF,Vit	311-00094
C19	Cap,.001uF,Vit	311-00094
C20	Cap,1uF	318-00306
C22	Cap,100pF,Vit	000-00000
C25	Cap,1uF	318-00306
C26	Cap,.22uF	000-00000
C27	Cap,1uF	318-00306
C28	Cap,20pF,5%	000-00000
C29	Cap,82pF	317-00301
C30	Cap,.001uF	316-00302
C31	Cap,.01uF	316-00303
C32	Cap,.1uF	316-00304
C33	Cap,1uF	316-00306
C34	Cap,.0015uF	311-00307
C35	Cap,10pF	311-00051
C36	Cap,100pF,DM15	311-00353
C37	Cap,1uF	318-00306
C38	Cap,470pF	311-00335
C39	Cap,1uF	318-00306
C40	Cap,220pF,Vit	311-00089
C41	Cap,1uF	318-00306
C42	Cap,100pF,Vit	000-00000
C43	Cap,100pF,Vit	000-00000
C44	Cap,1uF	318-00306
C45	Cap,1uF	318-00306
C46	Cap,1uF	318-00306
C47	Cap,100pF,DM15	311-00353
C48	Cap,.001uF,Vit	311-00094
C49	Cap,1uF	318-00306
C50	Cap,10pF	311-00051
C51	Cap,22pF,Vit	311-00088
C52	Cap,1uF	318-00306
C53	Cap,100pF,DM15	311-00353
C54	Cap,1uF	318-00306
C55	Cap,1uF	318-00306
C56	Cap,.0015uF	311-00307
C57	Cap,.001uF,Vit	311-00094
C58	Cap,1uF	318-00306
C59	Cap,10pF	311-00051
C60	Cap,22pF,Vit	311-00088
C61	Cap,1uF	318-00306
C62	Cap,100pF,DM15	311-00353
C63	Cap,1uF	318-00306
C64	Cap,1uF	318-00306
C65	Cap,.0015uF	311-00307
C66	Cap,4.7uF	318-00308
C67	Cap,4.7uF	318-00308
C68	Cap,1uF	318-00306
C69	Cap,100pF,Vit	000-00000
CR1	Diode,1N4448	376-00022
CR2	Diode,1N4448	376-00022
CR3	Diode,1N4448	376-00022
CR4	Diode,1N4448	376-00022
CR5	Diode,1N4448	376-00022
CR6	Diode,1N4448	376-00022
CR7	Diode,1N4448	376-00022
CR8	Diode,1N4448	376-00022
CR9	Diode,1N4448	376-00022
CR10	Diode,1N4448	376-00022
CR11	Diode,1N4448	376-00022
CR12	Diode,1N4448	376-00022
CR13	Diode,1N4448	376-00022
CR14	Diode,1N4448	376-00022
CR15	Diode,1N4448	376-00022
CR16	Diode,HPA2900	376-00302
CR17	Diode,HPA2900	376-00302
CR18	Diode,1N4448	376-00022
CR19	Diode,1N4448	376-00022
CR20	Diode,1N4448	376-00022
CR21	Diode,1N4448	376-00022
CR22	Diode,1N4448	376-00022
CR23	Diode,1N4448	376-00022
CR24	Diode,1N4448	376-00022
CR25	Diode,1N3719	376-00053
CR26	Diode,1N3719	376-00053
CR27	Diode,TD264	376-00086
CR28	Diode,BD3	376-00082
CR29	Diode,1N3714	376-00318
CR31	Diode,FD777	376-11764
CR32	Diode,FD777	376-11764
CR33	Diode,HPA2900	376-00302
CR34	Diode,FD777	376-11764
CR35	Diode,FD777	376-11764
CR36	Diode,1N3719	376-00053
CR37	Diode,1N4448	376-00022
CR38	Diode,HPA2900	376-00302
CR39	Diode,1N4448	376-00022
CR40	Diode,1N4448	376-00022
CR41	Diode,1N4448	376-00022
CR42	Diode,1N4448	376-00022
CR43	Diode,1N4448	376-00022
CR44	Diode,1N4448	376-00022
CR45	Diode,1N4448	376-00022
CR46	Diode,1N4448	376-00022
CR47	Diode,1N4448	376-00022
CR48	Diode,1N4448	376-00022
CR49	Diode,1N4448	376-00022
CR50	Diode,1N4448	376-00022
CR51	Diode,MA4B200	376-00081
E1	Term Standoff	484-00311
E2	Term Feedthru	484-00310
E3	Term Standoff	484-00311
E4	Term Standoff	484-00311
E5	Term Standoff	484-00311
E6	Term Standoff	484-00311
E7	Term Standoff	484-00311
E8	Term Standoff	484-00311
E9	Term Standoff	484-00311
E10	Term Standoff	484-00311

CIRCUIT REFERENCE	DESCRIPTION	E-H PART NO.
J1	Conn	721-00312
J2	Conn	721-00312
J3	Conn	721-00312
J4	Conn	721-00312
J5	Conn	721-00312
J6	Conn	721-00312
J7	Conn	721-00312
J8	Conn	721-00312
J9	Conn	721-00312
J10	Conn	721-00312
J11	Conn	721-00312
J12	Conn	721-00312
J13	Conn	721-00312
K1	Relay,3 Pin	000-00000
K1	Berg Pac,3PIn	700-00300
K2	Relay,3 Pin	000-00000
K2	Berg Pac.3PIn	700-00300
K3	Relay,3 Pin	000-00000
K3	Berg Pac,3PIn	700-00300
K4	U Core	361-00301
K4	Coil Relay,12V	585-40943
K4	Relay,Form A	584-00303
K5	U Core	361-00301
K5	Coil Relay,12V	585-40943
K5	Relay,Form A	584-00303
K6	U Core	361-00301
K6	Coil Relay,12V	585-40943
K6	Relay,Form A	584-00303
K7	U Core	361-00301
K7	Coil Relay,12V	585-40943
K7	Relay,Form A	584-00303
K8	U Core	361-00301
K8	Coil Relay,12V	585-40943
K8	Relay,Form A	584-00303
K9	U Core	361-00301
K9	Coil Relay,12V	585-40943
K9	Relay,Form A	584-00303
K10	Relay,3 Pin	000-00000
K10	Berg Pac,3PIn	700-00300
L1	Inductor	335-41283
L2	Inductor	335-41281
Q1	Trans,MPS3904	663-00700
Q2	Trans,MPS3904	663-00700
Q3	Trans,MPS3904	663-00700
Q4	Trans,MPS3904	663-00700
Q5	Trans,MPS3906	663-00701
Q6	Trans,MPS3904	663-00700
Q7	Trans,MPS3904	663-00700
Q8	Trans,MPS3906	663-00701
Q9	Trans,MPS3904	663-00700
Q10	Trans.MPS3904	663-00700
Q11	Trans,MPS3904	663-00700
Q12	Trans,MPS3904	663-00700
Q13	Trans,2N3646	663-00319
Q14	Trans,2N797	663-00344
Q15	Trans,SMT506	663-17250
Q16	Trans,2N3904	663-00070
Q17	Trans,2N3904	663-00070
Q17	Heat Sink	490-00018
Q20	Trans,MPS3904	663-00700
Q21	Trans,MPS3904	663-00700
Q22	Trans,2N3644	663-00318
Q23	Trans	663-11767
Q24	Trans,2N3906	663-00071
Q25	Trans,MPS3904	663-00700
Q26	Trans,2N3646	663-00319
Q27	Trans,2N3646	663-00319
Q28	Trans,2N3646	663-00319
Q29	Trans,2N3819	663-00321
Q30	Trans,2N3819	663-00321
Q31	Trans,MPS3906	663-00701
Q32	Trans,MPS3906	663-00701
Q33	Trans,2N3646	663-00319
Q34	Trans,2N3646	663-00319
Q35	Trans,MPS3904	663-00700
Q36	Trans,MPS3904	663-00700
Q37	Trans,MPS3906	663-00701
Q38	Trans,MPS3906	663-00701
Q39	Trans,MPS3906	663-00701
Q40	Trans,MPS3906	663-00701
Q41	Trans,MPS3906	663-00701
Q42	Trans,MPS3906	663-00701
Q43	Trans,MPS3906	663-00701
Q44	Trans,MPS3906	663-00701
Q45	Trans,MPS3906	663-00701
Q46	Trans,MPS3906	663-00701
Q47	Trans,MPS3906	663-00701
Q48	Trans,MPS3906	663-00701
Q49	Trans,MPS3906	663-00701
Q50	Trans,MPS3906	663-00701
Q51	Trans,MPS3906	663-00701
Q52	Trans,MPS3906	663-00701
Q53	Trans,MPS3906	663-00701
Q54	Trans,2N3565	663-00312
Q55	Trans,2N3565	663-00312
Q56	Trans,MPS3906	663-00701
Q57	Trans	663-41702
Q58	Trans,2N4360	663-00332
Q59	Trans,U233	663-00122
Q60	Trans,MPS3906	663-00701
Q61	Trans,2N3565	663-00312
Q62	Trans,2N3565	663-00312
Q63	Trans,MPS3906	663-00701
Q64	Trans	663-41702
Q65	Trans,2N4360	663-00332
Q66	Trans,U233	663-00122
Q67	Trans,MPS3906	663-00701

CIRCUIT REFERENCE	DESCRIPTION	E-H PART NO.
R1	Res,24K,1/4W,5%	595-00243
R2	Res,24K,1/4W,5%	595-00243
R3	Res,24K,1/4W,5%	595-00243
R4	Res,5.1K,1/4W,5%	595-00512
R5	Res,5.1K,1/4W,5%	595-00512
R6	Res,5.1K,1/4W,5%	595-00512
R7	Res,2.7K,1/4W,5%	595-00272
R8	Res,2K,1/4W,5%	595-00202
R9	Res,4.7K,1/4W,5%	595-00472
R10	Res,20,1/4W,5%	595-00200
R11	Res,1.5K,1/4W,5%	595-00152
R12	Res,200,1/8W,1%	000-00000
R13	Res,301,1/8W,1%	000-00000
R14	Res,51,1/4W,5%	595-00510
R15	Res,1K,1/4W,5%	595-00102
R16	Res,1.5K,1/4W,5%	595-00152
R17	Res,1K,1/4W,5%	595-00102
R18	Res,20K,1/4W,5%	595-00203
R19	Res,56K,1/4W,5%	595-00563
R20	Res,1K,1/4W,5%	595-00102
R21	Res,200,1/4W,5%	595-00201
R22	Res,750,1/2W,1%	000-00000
R23	Res,20,1/4W,5%	595-00200
R24	Res,10K,1/4W,5%	595-00103
R25	Res,150,1/4W,5%	595-00151
R26	Res,510,1/4W,5%	595-00511
R27	Res,510,1/4W,5%	595-00511
R28	Res,6.2K,1/4W,5%	595-00622
R29	Res,750,1/4W,5%	595-00751
R30	Res,1K,1/4W,5%	595-00102
R31	Res,1K,1/4W,5%	595-00102
R32	Res,100,1/4W,5%	595-00101
R33	Res,4.99K,1/8W,1%	616-00327
R34	Res,2.74K,1/8W,1%	000-00000
R35	Res,549,1/8W,1%	616-00312
R36	Res,10,1/8W,5%	594-00100
R37	Res,30,1/8W,5%	594-00300
R38	Res,30,1/8W,5%	594-00300
R39	Res,10,1/8W,5%	594-00100
R40	Res,2K,1/8W,5%	594-00202
R41	Res,15K,1/4W,5%	595-00153
R42	Res,2.7K,1/4W,5%	595-00272
R44	Res,51,1/8W,5%	616-00364
R45	Res,51,1/8W,5%	616-00364
R46	Res,15K,1/4W,5%	595-00153
R47	Res,200,1/2W,5%	596-00201
R48	Res,300,1/2W,5%	596-00301
R49	Res,1.5K,1/4W,5%	595-00152
R50	Res,15K,1/4W,5%	595-00153
R51	Res,3.6K,1/4W,5%	595-00362
R52	Res,2.7K,1/4W,5%	595-00272
R53	Res,51,1/4W,5%	595-00510
R54	Res,51,1/4W,5%	595-00510
R55	Res,2K,1/4W,5%	595-00202

CIRCUIT REFERENCE	DESCRIPTION	E-H PART NO.
R56	Res,2K,1/4W,5%	595-00202
R57	Res,100,1/4W,5%	595-00101
R58	Res,100,1/8W,5%	594-00101
R67	Res,24K,1/4W,5%	595-00243
R68	Res,5.1K,1/4W,5%	595-00512
R69	Res,5.1K,1/4W,5%	595-00512
R70	Res,5.1K,1/4W,5%	595-00512
R71	Res,5.23K,1/4W,.5%	000-00000
R72	Res,15K,1/8W,.5%	000-00000
R73	Res,10K,1/4W,5%	595-00103
R74	Res,750,5W,WW	610-00065
R75	Res,350,5W,5%	000-00000
R76	Pot,50K	551-00059
R77	Res,560,3W,5%	610-00007
R78	Res,6.2K,1/4W,5%	595-00622
R79	Res,2K,1/4W,5%	595-00202
R80	Res,2K,1/4W,5%	595-00202
R81	Res,2K,1/4W,5%	595-00202
R82	Res,2K,1/4W,5%	595-00202
R83	Pot,10K	000-00000
R84	Pot,5K	551-00060
R85	Pot,5K	551-00060
R86	Pot,5K	551-00060
R87	Pot,5K	551-00060
R88	Res,100,1/4W,5%	595-00101
R89	Res,11,1/4W,5%	595-00110
R90	Res,18,1/8W,5%	594-00180
R91	Res,68,1/4W,5%	595-00680
R92	Res,75,1/8W,1%	616-00302
R93	Res,75,1/8W,1%	616-00302
R94	Res,75,1/8W,1%	616-00302
R95	Res,75,1/8W,1%	616-00302
R96	Res,10K,1/4W,5%	595-00103
R97	Res,20K,1/4W,5%	595-00203
R98	Res,5.1K,1/4W,5%	595-00512
R99	Res,270,1/4W,5%	595-00271
R100	Res,1K,1/2W,5%	596-00102
R101	Res,15K,1/4W,5%	595-00153
R102	Res,10K,1/4W,5%	595-00103
R103	Res,2.7K,1/4W,5%	595-00272
R104	Res,100,1/4W,5%	595-00101
R105	Res,51,1/8W,5%	616-00364
R106	Res,39K,1/4W,5%	595-00393
R107	Res,1K,1/4W,5%	595-00102
R108	Res,500,3W,5%	610-00119
R109	Res,620,1/4W,5%	595-00621
R110	Res,3.9K,1/4W,5%	595-00392
R111	Res,150K,1/4W,5%	595-00154
R112	Res,10,1/4W,5%	595-00100
R113	Res,1M,1/4W,5%	595-00105
R114	Res,11K,1/4W,5%	595-00113
R115	Res,5.1K,1/4W,5%	595-00512

CIRCUIT REFERENCE	DESCRIPTION	E-H PART NO.
R116	Res,499,1/4W,.5%	000-00000
R117	Res,301,1/4W,5%	000-00000
R118	Res,200,1/8W,1%	000-00000
R119	Res,2K,1/4W,5%	595-00202
R120	Res,10,1/4W,5%	595-00100
R121	Res,1.02K,1/4W,.5%	000-00000
R122	Res,10,1/4W,5%	595-00100
R123	Res,6.2K,1/4W,5%	595-00622
R124	Pot,50K	551-00059
R125	Res,82K,1/4W,5%	595-00823
R126	Res,5.6K,1/4W,5%	595-00562
R127	Res,40.2K,1/8W,1%	616-00342
R128	Res,5.6K,1/4W,5%	595-00562
R129	Res,20K,1/8W,1%	616-00338
R130	Res,5.6K,1/4W,5%	595-00562
R131	Res,10K,1/8W,1%	616-00334
R132	Res,5.6K,1/4W,5%	595-00562
R133	Res,8.06K,1/4W,1%	617-00035
R134	Res,5.6K,1/4W,5%	595-00562
R135	Res,4.02K,1/8W,1%	616-00324
R136	Res,5.6K,1/4W,5%	595-00562
R137	Res,2K,1/8W,1%	616-00320
R138	Res,5.6K,1/4W,5%	595-00562
R139	Res,1K,1/8W,1%	616-00316
R140	Res,5.6K,1/4W,5%	595-00562
R141	Res,11K,1/4W,5%	595-00113
R142	Res,11K,1/4W,5%	595-00113
R143	Res,11K,1/4W,5%	595-00113
R144	Res,11K,1/4W,5%	595-00113
R145	Res,11K,1/4W,5%	595-00113
R146	Res,11K,1/4W,5%	595-00113
R147	Res,11K,1/4W,5%	595-00113
R148	Res,11K,1/4W,5%	595-00113
R149	Res,4.7K,1/4W,5%	595-00472
R150	Res,4.7K,1/4W,5%	595-00472
R151	Res,4.7K,1/4W,5%	595-00472
R152	Res,4.7K,1/4W,5%	595-00472
R153	Res,4.7K,1/4W,5%	595-00472
R154	Res,4.7K,1/4W,5%	595-00472
R155	Res,4.7K,1/4W,5%	595-00472
R156	Res,4.7K,1/4W,5%	595-00472
R157	Res,12K,1/4W,5%	595-00123
R158	Res,390,1/4W,5%	595-00391
R159	Res,8.2K,1/4W,5%	595-00822
R160	Res,300,1/4W,5%	595-00301
R161	Res,24K,1/4W,5%	595-00243
R162	Res,2K,1/2W,5%	596-00202
R163	Res,5.1K,1/4W,5%	595-00512
R164	Res,680,1/4W,5%	595-00681
R165	Res,330K,1/4W,5%	595-00334
R166	Res,10,1/4W,5%	595-00100
R167	Pot,10K	000-00000
R168	Res,6.8K,1/4W,5%	595-00682
R169	Res,10,1/4W,5%	595-00100
R170	Res,3K,1/2W,5%	596-00302

CIRCUIT REFERENCE	DESCRIPTION	E-H PART NO.
R171	Res,330K,1/4W,5%	595-00334
R172	Res,10,1/4W,5%	595-00100
R173	Res,4.27K,1/4W,.5%	000-00000
R174	Res,1.07K,1/4W,.5%	000-00000
R175	Res,12K,1/4W,5%	595-00123
R176	Res,390,1/4W,5%	595-00391
R177	Res,8.2K,1/4W,5%	595-00822
R178	Res,300,1/4W,5%	595-00301
R179	Res,24K,1/4W.5%	595-00243
R180	Res,2K,1/2W,5%	596-00202
R181	Res,5.1K,1/4W,5%	595-00512
R182	Res,680,1/4W,5%	595-00681
R183	Res,330K,1/4W,5%	595-00334
R184	Res,10,1/4W,5%	595-00100
R185	Pot,10K	000-00000
R186	Res,6.8K,1/4W,5%	595-00682
R187	Res,24K,1/4W,5%	595-00243
R188	Res,10,1/4W,5%	595-00100
R189	Res,3K,1/2W,5%	596-00302
R190	Res,330K,1/4W,5%	595-00334
R191	Res,10,1/4W,5%	595-00100
R192	Res,4.27K,1/4W,.5%	000-00000
R193	Res,1.07K,1/4W,.5%	000-00000
R195	Res,3.2,1/4W,5%	595-00032
T1	Transf Assy	651-41282
UL1	Socket,14 Pin	495-00040
UL1	IC,N8280A	665-00026
UL2	Socket,14 Pin	495-00040
UL2	IC,MC7473P	000-00000
UL3	Socket,14 Pin	495-00040
UL3	IC,MC7400P	665-00024
UL4	Socket,14 Pin	495-00040
UL4	IC,MC7410P	665-00029
UL5	Socket,14 Pin	495-00040
UL5	IC,N8280A	665-00026
UL6	Socket,14 Pin	495-00040
UL6	IC,N8280A	665-00026
UL7	Socket,14 Pin	495-00040
UL7	IC,MC7400P	665-00024
UL8	Socket,16 Pin	495-00054
UL8	IC,MC74145P	000-00000
UL9	Socket,16 Pin	495-00054
UL9	IC,MC74145P	000-00000

5-6	CHASSIS POWER SUPPLY ASSEMBLY	255-41862
C301	Cap,E1,530uF,250V	316-00320
C302	Cap,E1,4500uF,50V	316-00308
C303	Cap,E1,2600uF,50V	316-00087
C304	Cap,E1,8500uF,25V	316-00328
C305	Cap,E1,8500uF,25V	316-00328
C306	Cap,E1,8500uF,25V	316-00328
C307	Cap,E1,2600uF,50V	316-00087

CIRCUIT REFERENCE	DESCRIPTION	E-H PART NO.
CR301	Diode,MR1120	376-00000
CR302	Diode,MR1120	376-00000
CR303	Diode,MR1120	376-00000
CR304	Diode,MR1120	376-00000
CR305	SCR,SC20F	378-00301
CR305	Diode	490-00300
Q301	Trans,DTS423	663-00067
Q302	Trans,MJ481	663-00126
Q303	Trans,2N3055	663-00073
Q304	Trans,2N5881	663-00000
Q305	Trans,MJ491	663-00000
R301	Res,.1,5W,5%	610-00000
T301	Transf,Pwr	650-19605
5-7	PREAMP MEMORY BOARD	401-41757
C1	Cap,1uF	318-00306
C2	Cap,1uF	318-00306
C3	Cap,1uF	318-00306
C4	Cap,100pF	311-00353
C5	Cap,1uF	318-00306
C6	Cap,1uF	318-00306
C7	Cap,1uF	318-00306
C8	Cap,100pF	311-00353
C9	Cap,1500pF	326-00023
C10	Cap,1uF	318-00306
C11	Cap,100pF	311-00353
C12	Cap,.0033uF	311-00311
C13	Cap,100pF	311-00353
C14	Cap,1500pF	326-00023
C15	Cap,1uF	318-00306
C16	Cap,10pF	311 00051
C17	Cap,1uF	318-00306
C18	Cap,.0033uF	311-00311
C19	Cap,100pF	311-00353
C20	Cap,1500pF	326-00023
C21	Cap,1uF	318-00306
C22	Cap,100pF	311-00353
C23	Cap,.0033uF	311-00311
C24	Cap,100pF	311-00353
C25	Cap,1500pF	326-00023
C26	Cap,1uF	318-00306
C27	Cap,10pF	311 00051
C28	Cap,1uF	318-00306
C29	Cap,.0033uF	311-00311
C30	Cap,100pF	311-00353
CR1	Diode,1N4448	376-00022
CR2	Diode,1N4448	376-00022
CR3	Diode,1N4448	376-00022
CR4	Diode,1N4448	376-00022
CR5	Diode,1N4448	376-00022
CR6	Diode,1N4448	376-00022
CR7	Diode,1N4448	376-00022
CR8	Diode,1N4448	376-00022
CR9	Diode,1N4448	376-00022
CR10	Diode,1N4448	376-00022
CR11	Diode,1N4448	376-00022
CR12	Diode,1N4448	376-00022
CR13	Diode,1N4448	376-00022
CR14	Diode,1N4448	376-00022
CR15	Diode,FJT2000	376-00080
CR16	Diode,1N4448	376-00022
CR17	Diode	376-00300
CR18	Diode,FJT2000	376-00080
CR19	Diode,1N4448	376-00022
CR20	Diode,1N5244	374-00079
CR21	Diode	376-00300
CR22	Diode,FJT2000	376-00080
CR23	Diode,1N4448	376-00022
CR24	Diode	376-00300
CR25	Diode,FJT2000	376-00080
CR26	Diode,1N4448	376-00022
CR27	Diode,1N5244	374-00079
CR28	Diode	376-00300
CR29	Diode,1N4448	376-00022
CR30	Diode,1N4448	376-00022
CR31	Diode,1N4448	376-00022
CR32	Diode,1N4448	376-00022
E1	Terminal	484-00310
E2	Terminal	484-00310
E3	Terminal	484-00310
E4	Terminal	484-00310
J1	Connector	721-00312
J2	Connector	721-00312
J3	Connector	721-00312
J4	Connector	721-00312
J5	Connector	721-00312
J6	Connector	721-00312
J7	Connector	721-00312
J8	Connector	721-00312
K1	Berg Pac,3 Pin	700-00300
K2	Berg Pac,3 Pin	700-00300
K3	Berg Pac,3 Pin	700-00300
K4	Berg Pac,3 Pin	700-00300
K5	Berg Pac,3 Pin	700-00300
K6	Berg Pac,3 Pin	700-00300
K7	Berg Pac,3 Pin	700-00300
K8	Berg Pac,3 Pin	700-00300
K9	Berg Pac,3 Pin	700-00300
K10	Berg Pac,3 Pin	700-00300
K11	Berg Pac,3 Pin	700-00300
K12	Berg Pac,3 Pin	700-00300

CIRCUIT REFERENCE	DESCRIPTION	E-H PART NO.
Q1	Trans,MPS3906	663-00701
Q2	Trans,MPS3906	663-00701
Q3	Trans,MPS3906	663-00701
Q4	Trans,MPS3906	663-00701
Q5	Trans,MPS3906	663-00701
Q6	Trans,MPS3906	663-00701
Q7	Trans,MPS3906	663-00701
Q8	Trans,MPS3906	663-00701
Q9	Trans,MPS3906	663-00701
Q10	Trans,MPS3906	663-00701
Q11	Trans,U233	663-00122
Q12	Trans,MPSA65	663-00118
Q13	Trans,MPS3904	663-00700
Q14	Trans,MPS3906	663-00701
Q15	Trans,MPS3906	663-00701
Q16	Trans,MPS3906	663-00701
Q17	Trans,MPS3906	663-00701
Q18	Trans,MPS3906	663-00701
Q19	Trans,MPS3906	663-00701
Q20	Trans,MPS3906	663-00701
Q21	Trans,MPS3906	663-00701
Q22	Trans,MPS3906	663-00701
Q23	Trans,MPS3906	663-00701
Q24	Trans,U233	663-00122
Q25	Trans,MPSA65	663-00118
Q26	Trans,MPS3904	663-00700
Q27	Trans,MPS3904	663-00700
Q28	Trans,MPS3904	663-00700
Q29	Trans,MPS3906	663-00701
Q30	Trans,MFE3001	663-00117
Q31	Trans,MFE3001	663-00117
Q32	Trans,MPSA65	663-00118
Q33	Trans,2N2914	663-00347
Q34	Trans,MPS3906	663-00701
Q35	Trans,MPS3904	663-00700
Q36	Trans,MPS3904	663-00700
Q37	Trans,MPS3906	663-00701
Q38	Trans,MPS3904	663-00700
Q39	Trans,2N2914	663-00347
Q40	Trans,MFE3001	663-00117
Q41	Trans,MFE3001	663-00117
Q42	Trans,MPSA65	663-00118
Q43	Trans,MPS3906	663-00701
Q44	Trans,MPS3906	663-00701
Q45	Trans,MPS3904	663-00700
Q46	Trans,MPS3904	663-00700
Q47	Trans,MPS3904	663-00700
Q48	Trans,MPS3906	663-00701
Q49	Trans,MFE3001	663-00117
Q50	Trans,MFE3001	663-00117
Q51	Trans,MPSA65	663-00118
Q52	Trans,2N2914	663-00347
Q53	Trans,MPS3906	663-00701
Q54	Trans,MPS3904	663-00700
Q55	Trans,MPS3904	663-00700
Q56	Trans,MPS3906	663-00701
Q57	Trans,MPS3904	663-00700
Q58	Trans,2N2914	663-00347
Q59	Trans,MFE3001	663-00117
Q60	Trans,MFE3001	663-00117
Q61	Trans,MPSA65	663-00118
Q62	Trans,MPS3906	663-00701
Q63	Trans,MPS3906	663-00701
Q64	Trans,MPS3904	663-00700
Q65	Trans,MPS3904	663-00700
R1	Res,1.82K,1/8W,1%	000-00000
R2	Res,10K,1/8W,1%	616-00334
R3	Res,11.3K,1/8W,1%	000-00000
R4	Res,1.3K,1/4W,5%	595-00132
R5	Pot,5K	551-00060
R6	Res,1K,1/2W,5%	596-00102
R7	Res,35.7K,1/8W,1%	000-00000
R8	Res,12K,1/4W,5%	595-00123
R9	Res,8.2K,1/4W,5%	595-00822
R10	Res,5.1K,1/4W,5%	595-00512
R11	Res,18.2K,1/8W,1%	000-00000
R12	Res,12K,1/4W,5%	595-00123
R13	Res,8.2K,1/4W,5%	595-00822
R14	Res,5.1K,1/4W,5%	595-00512
R15	Res,9.09K,1/8W,1%	616-00332
R16	Res,12K,1/4W,5%	595-00123
R17	Res,8.2K,1/4W,5%	595-00822
R18	Res,5.1K,1/4W,5%	595-00512
R19	Res,4.53K,1/8W,1%	000-00000
R20	Res,12K,1/4W,5%	595-00123
R21	Res,8.2K,1/4W,5%	595-00822
R22	Res,5.1K,1/4W,5%	595-00512
R23	Res,2.40K,1/8W,.5%	000-00000
R24	Res,12K,1/4W,5%	595-00123
R25	Res,8.2K,1/4W,5%	595-00822
R26	Res,5.1K,1/4W,5%	595-00512
R27	Res,330K,1/4W,5%	595-00334
R28	Res,20,1/4W,5%	595-00200
R29	Res,24K,1/4W,5%	595-00243
R30	Buss Wire	000-00000
R31	Buss Wire	000-00000
R32	Res,499,1/4W,.5%	000-00000
R33	Res,301,1/4W,.5%	000-00000
R34	Res,100,1/4W,.5%	000-00000
R35	Res,49.9,1/8W,1%	000-00000
R36	Res,30.1,1/8W,1%	000-00000
R37	Res,20,1/8W,1%	000-00000
R38	Res,2K,1/2W,5%	596-00202
R39	Res,1.82K,1/8W,1%	000-00000
R40	Res,10K,1/8W,1%	616-00334
R41	Res,11.3K,1/8W,1%	000-00000
R42	Res,1.3K,1/4W,5%	595-00132
R43	Pot,5K	551-00060
R44	Res,1K,1/2W,5%	596-00102
R45	Res,35.7K,1/8W,1%	000-00000

CIRCUIT REFERENCE	DESCRIPTION	E-H PART NO.
R46	Res,12K,1/4W,5%	595-00123
R47	Res,8.2K,1/4W,5%	595-00822
R48	Res,5.1K,1/4W,5%	595-00512
R49	Res,18.2K,1/8W,1%	000-00000
R50	Res,12K,1/4W,5%	595-00123
R51	Res,8.2K,1/4W,5%	595-00822
R52	Res,5.1K,1/4W,5%	595-00512
R53	Res,9.09K,1/8W,1%	616-00332
R54	Res,12K,1/4W,5%	595-00123
R55	Res,8.2K,1/4W,5%	595-00822
R56	Res,5.1K,1/4W,5%	595-00512
R57	Res,4.53K,1/8W,1%	000-00000
R58	Res,12K,1/4W,5%	595-00123
R59	Res,8.2K,1/4W,5%	595-00822
R60	Res,5.1K,1/4W,5%	595-00512
R61	Res,2.40K,1/8W,.5%	000-00000
R62	Res,12K,1/4W,5%	595-00123
R63	Res,8.2K,1/4W,5%	595-00822
R64	Res,5.1K,1/4W,5%	595-00512
R65	Res,330K,1/4W,5%	595-00334
R66	Res,20,1/4W,5%	595-00200
R67	Res,24K,1/4W,5%	595-00243
R68	Buss Wire	000-00000
R69	Buss Wire	000-00000
R70	Res,499,1/4W,.5%	000-00000
R71	Res,301,1/4W,.5%	000-00000
R72	Res,100,1/4W,.5%	000-00000
R73	Res,49.9,1/8W,1%	000-00000
R74	Res,30.1,1/8W,1%	000-00000
R75	Res,20,1/8W,1%	000-00000
R76	Res,2K,1/2W,5%	596-00202
R77	Res,6.2K,1/4W,5%	595-00622
R78	Res,6.2K,1/4W,5%	595-00622
R79	Res,5.1K,1/4W,5%	595-00512
R80	Res,5.1K,1/4W,5%	595-00512
R81	Res,3K,1/4W,5%	595-00302
R82	Res,10K,1/4W,5%	595-00103
R83	Res,240K,1/4W,5%	595-00244
R84	Res,680,1/4W,5%	595-00681
R85	Res,5.1K,1/4W,5%	595-00512
R86	Pot,5K	551-00060
R87	Res,10K,1/4W,5%	595-00103
R88	Res,10K,1/4W,5%	595-00103
R89	Res,680,1/4W,5%	595-00681
R90	Res,10K,1/4W,5%	595-00103
R91	Res,270K,1/4W,5%	595-00274
R92	Res,10K,1/4W,5%	595-00103
R93	Res,10K,1/4W,5%	595-00103
R94	Res,100,1/4W,5%	595-00101
R95	Res,3K,1/2W,5%	596-00302
R96	Res,5.1K,1/4W,5%	595-00512
R97	Res,10K,1/4W,5%	595-00103
R98	Res,1K,1/4W,5%	595-00102
R99	Res,6.2K,1/4W,5%	595-00622
R100	Res,5.1K,1/4W,5%	595-00512

CIRCUIT REFERENCE	DESCRIPTION	E-H PART NO.
R101	Res,200K,1/4W,5%	595-00204
R102	Res,680,1/4W,5%	595-00681
R103	Res,3.3K,1/4W,5%	595-00332
R104	Pot,5K	551-00060
R105	Res,10K,1/4W,5%	595-00103
R106	Res,10K,1/4W,5%	595-00103
R107	Res,680,1/4W,5%	595-00681
R108	Res,10K,1/4W,5%	595-00103
R109	Res,300K,1/4W,5%	595-00304
R110	Res,10K,1/4W,5%	595-00103
R111	Res,10K,1/4W,5%	595-00103
R112	Res,100,1/4W,5%	595-00101
R113	Res,3K,1/2W,5%	596-00302
R114	Res,6.2K,1/4W,5%	595-00622
R115	Res,5.1K,1/4W,5%	595-00512
R116	Res,6.2K,1/4W,5%	595-00622
R117	Res,5.1K,1/4W,5%	595-00512
R118	Res,3K,1/4W,5%	595-00302
R119	Res,10K,1/4W,5%	595-00103
R120	Res,240K,1/4W,5%	595-00244
R121	Res,680,1/4W,5%	595-00681
R122	Res,5.1K,1/4W,5%	595-00512
R123	Pot,5K	551-00060
R124	Res,10K,1/4W,5%	595-00103
R125	Res,10K,1/4W,5%	595-00103
R126	Res,680,1/4W,5%	595-00681
R127	Res,10K,1/4W,5%	595-00103
R128	Res,270K,1/4W,5%	595-00274
R129	Res,10K,1/4W,5%	595-00103
R130	Res,10K,1/4W,5%	595-00103
R131	Res,100,1/4W,5%	595-00101
R132	Res,3K,1/2W,5%	596-00302
R133	Res,5.1K,1/4W,5%	595-00512
R134	Res,10K,1/4W,5%	595-00103
R135	Res,1K,1/4W,5%	595-00102
R136	Res,5.1K,1/4W,5%	595-00512
R137	Res,200K,1/4W,5%	595-00204
R138	Res,680,1/4W,5%	595-00681
R139	Res,3.3K,1/4W,5%	595-00332
R140	Pot,5K	551-00060
R141	Res,10K,1/4W,5%	595-00103
R142	Res,10K,1/4W,5%	595-00103
R143	Res,680,1/4W,5%	595-00681
R144	Res,10K,1/4W,5%	595-00103
R145	Res,300K,1/4W,5%	595-00304
R146	Res,10K,1/4W,5%	595-00103
R147	Res,10K,1/4W,5%	595-00103
R148	Res,100,1/4W,5%	595-00101
R149	Res,3K,1/2W,5%	596-00302
R150	Res,10K,1/8W,1%	616-00334
R151	Res,10K,1/8W,1%	616-00334
R152	Res,10K,1/4W,5%	595-00103
R153	Res,6.2K,1/4W,5%	595-00622

CIRCUIT REFERENCE	DESCRIPTION	E-H PART NO.
UL1	Socket,14Pin	495-00040
UL1	IC,MC3022P	000-00000
UL2	Socket,14Pin	495-00040
UL2	IC,MC7404P	000-00000
UL3	Socket,14Pin	495-00040
UL3	IC,MC7400P	665-00024
UL4	Socket,16Pin	495-00054
UL4	IC,MC74145P	000-00000
UL5	Socket,14Pin	495-00040
UL5	IC,MC3022P	000-00000
UL6	Socket,14Pin	495-00040
UL6	IC,MC7404P	000-00000
UL7	Socket,14Pin	495-00040
UL7	IC,MC7400P	665-00024
UL8	Socket,16Pin	495-00054
UL8	IC,MC74145P	000-00000
5-8	LOGIC BOARD ASSEMBLY	401-41760
C1	Cap,1uF	318-00306
C2	Cap,.1uF	311-00331
C3	Cap,1uF	318-00306
C4	Cap,.0022uF	211-00309
C5	Cap,1uF	318-00306
C6	Cap,.0022uF	211-00309
C7	Cap,.0022uF	211-00309
C8	Cap,1uF	318-00306
C9	Cap,.0022uF	211-00309
C10	Cap,4.7uF	318-00308
C11	Cap,4.7uF	318-00308
C12	Cap,4.7uF	318-00308
C13	Cap,1uF	318-00306
C14	Cap,1uF	318-00306
C15	Cap,1uF	318-00306
C16	Cap,1uF	318-00306
C17	Cap,1uF	318-00306
CR1	Diode,1N4448	376-00022
CR2	Diode,1N4448	376-00022
CR3	Diode,1N4448	376-00022
CR4	Diode,1N4448	376-00022
CR5	Diode,1N4448	376-00022
CR6	Diode,1N4448	376-00022
CR7	Diode,1N4448	376-00022
CR8	Diode,1N4448	376-00022
CR9	Diode,1N4448	376-00022
CR10	Diode,1N4448	376-00022
CR11	Diode,1N4448	376-00022
CR12	Diode,1N4448	376-00022
CR13	Diode,1N4448	376-00022
CR14	Diode,1N4448	376-00022
CR15	Diode,1N4448	376-00022
CR16	Diode,1N4448	376-00022
CR17	Diode,1N4448	376-00022
CR18	Diode,1N4448	376-00022
CR19	Diode,1N4448	376-00022
CR20	Diode,1N4448	376-00022
CR21	Diode,1N4448	376-00022
CR22	Diode,1N4448	376-00022
CR23	Diode,1N4448	376-00022
CR24	Diode,1N4448	376-00022
CR25	Diode,1N4448	376-00022
CR26	Diode,1N4448	376-00022
CR27	Diode,1N4448	376-00022
CR28	Diode,1N4448	376-00022
CR29	Diode,1N4448	376-00022
CR30	Diode,1N4448	376-00022
CR31	Diode,1N4448	376-00022
CR32	Diode,1N4448	376-00022
CR33	Diode,1N4448	376-00022
CR34	Diode,1N4448	376-00022
CR35	Diode,1N4448	376-00022
CR36	Diode,1N4448	376-00022
CR37	Diode,1N4448	376-00022
CR38	Diode,1N4448	376-00022
CR39	Diode,1N4448	376-00022
CR40	Diode,1N4448	376-00022
CR41	Diode,1N4448	376-00022
CR42	Diode,1N4448	376-00022
CR43	Diode,1N4448	376-00022
CR44	Diode,1N4448	376-00022
CR45	Diode,1N4448	376-00022
CR46	Diode,1N4448	376-00022
CR47	Diode,1N4448	376-00022
CR48	Diode,1N4448	376-00022
CR49	Diode,1N4448	376-00022
CR50	Diode,1N4448	376-00022
CR51	Diode,1N4448	376-00022
CR52	Diode,1N4448	376-00022
CR53	Diode,1N4448	376-00022
CR54	Diode,1N4448	376-00022
CR55	Diode,1N4448	376-00022
CR56	Diode,1N4448	376-00022
CR57	Diode,1N4448	376-00022
CR58	Diode,1N4448	376-00022
CR59	Diode,1N4448	376-00022
CR60	Diode,1N4448	376-00022
CR61	Diode,1N4448	376-00022
CR62	Diode,1N4448	376-00022
CR63	Diode,1N4448	376-00022
CR64	Diode,1N4448	376-00022
CR65	Diode,1N4448	376-00022
CR66	Diode,1N4448	376-00022
CR67	Diode,1N4448	376-00022
CR68	Diode,1N4448	376-00022
CR69	Diode,1N4448	376-00022
CR70	Diode,1N4448	376-00022
CR71	Diode,1N4448	376-00022
CR72	Diode,1N4448	376-00022
CR73	Diode,1N4448	376-00022
CR74	Diode,1N4448	376-00022
CR75	Diode,1N4448	376-00022

CIRCUIT REFERENCE	DESCRIPTION	E-H PART NO.
CR76	Diode,1N4448	376-00022
CR77	Diode,1N4448	376-00022
CR78	Diode,MSD6100	376-00300
CR79	Diode,1N4448	376-00022
CR80	Diode,1N4448	376-00022
CR81	Diode,MSD6100	376-00300
CR82	Diode,1N4448	376-00022
CR83	Diode,1N4448	376-00022
CR84	Diode,1N4448	376-00022
CR85	Diode,1N4448	376-00022
CR86	Diode,1N4448	376-00022
J1	Connector	721-00312
J2	Connector	721-00312
K1	Relay,Pickup,12V	584-00000
K1	Berg Pack,3Pin	700-00300
K2	Relay,Pickup,12V	584-00000
K2	Berg Pack,3Pin	700-00300
K3	Relay,Pickup,12V	584-00000
K3	Berg Pack,3Pin	700-00300
K4	Relay,Pickup,12V	584-00000
K4	Berg Pack,3Pin	700-00300
K5	Relay,Pickup,12V	584-00000
K5	Berg Pack,3Pin	700-00300
K6	Relay,Pickup,12V	584-00000
K6	Berg Pack,3Pin	700-00300
K7	Relay,Pickup,12V	584-00000
K7	Berg Pack,3Pin	700-00300
K8	Relay,Pickup,12V	584-00000
K8	Berg Pack,3Pin	700-00300
K9	Relay,Pickup,12V	584-00000
K9	Berg Pack,3Pin	700-00300
K10	Relay,Pickup,12V	584-00000
K10	Berg Pack,3Pin	700-00300
K11	Relay,Pickup,12V	584-00000
K11	Berg Pack,3Pin	700-00300
K12	Relay,Pickup,12V	584-00000
K12	Berg Pack,3Pin	700-00300
K13	Relay,Pickup,12V	584-00000
K13	Berg Pack,3Pin	700-00300
K14	Relay,Pickup,12V	584-00000
K14	Berg Pack,3Pin	700-00300
K15	Relay,Pickup,12V	584-00000
K15	Berg Pack,3Pin	700-00300
K16	Relay,Pickup,12V	584-00000
K16	Berg Pack,3Pin	700-00300
K17	Relay,Pickup,12V	584-00000
K17	Berg Pack,3Pin	700-00300
K18	Relay,Pickup,12V	584-00000
K18	Berg Pack,3Pin	700-00300
K19	Relay,Pickup,12V	584-00000
K19	Berg Pack,3Pin	700-00300
K20	Relay,Pickup,12V	584-00000
K20	Berg Pack,3Pin	700-00300
K21	Relay,Pickup,12V	584-00000
K21	Berg Pack,3Pin	700-00300
K22	Relay,Pickup,12V	584-00000
K22	Berg Pack,3Pin	700-00300
K23	Relay,Pickup,12V	584-00000
K23	Berg Pack,3Pin	700-00300
K24	Relay,Pickup,12V	584-00000
K24	Berg Pack,3Pin	700-00300
K25	Relay,Pickup,12V	584-00000
K25	Berg Pack,3Pin	700-00000
K26	Relay,Pickup,12V	584-00000
K26	Berg Pack,3Pin	700-00000
K27	Relay,Pickup,12V	584-00000
K27	Berg Pack,3Pin	700-00300
K28	Relay,Pickup,12V	584-00000
K28	Berg Pack,3Pin	700-00300
K29	Relay,Pickup,12V	584-00000
K29	Berg Pack,3Pin	700-00300
K30	Relay,Pickup,12V	584-00000
K30	Berg Pack,3Pin	700-00300
K31	Relay,Pickup,12V	584-00000
K31	Berg Pack,3Pin	700-00300
K32	Relay,Pickup,12V	584-00000
K32	Berg Pack,3Pin	700-00300
K33	Relay,Pickup,12V	584-00000
K33	Berg Pack,4Pin	700-00301
K34	Relay,Pickup,12V	584-00000
K34	Berg Pack,4Pin	700-00301
K35	Relay,Pickup,12V	584-00000
K35	Berg Pack,4Pin	700-00301
K36	Relay,Pickup,12V	584-00000
K36	Berg Pack,3Pin	700-00300
K37	Relay,Pickup,12V	584-00000
K37	Berg Pack,3Pin	700-00300
K38	Relay,Pickup,12V	584-00000
K38	Berg Pack,3Pin	700-00300
K39	Relay,Pickup,12V	584-00000
K39	Berg Pack,3Pin	700-00300
K40	Relay,Pickup,12V	584-00000
K40	Berg Pack,3Pin	700-00300
K41	Relay,Pickup,12V	584-00000
K41	Berg Pack,3Pin	700-00300
K42	Relay,Pickup,12V	584-00000
K42	Berg Pack,3Pin	700-00300
K43	Relay,Pickup,12V	584-00000
K43	Berg Pack,3Pin	700-00300
K44	Relay,Pickup,12V	584-00000
K44	Berg Pack,3Pin	700-00300
K45	Relay,Pickup,12V	584-00000
K45	Berg Pack,3Pin	700-00300
K46	Relay,Pickup,12V	584-00000
K46	Berg Pack,3Pin	700-00300
K47	Relay,Pickup,12V	584-00000
K47	Berg Pack,3Pin	700-00300

CIRCUIT REFERENCE	DESCRIPTION	E-H PART NO.
Q1	Trans,MPS3904	663-00700
Q2	Trans,MPS3904	663-00700
Q3	Trans,MPS3904	663-00700
Q4	Trans,MPS3904	663-00700
Q5	Trans,MPS3904	663-00700
Q6	Trans,MPS3904	663-00700
Q7	Trans,MPS3904	663-00700
Q8	Trans,MPS3904	663-00700
Q9	Trans,MPS3904	663-00700
Q10	Trans,MPS3904	663-00700
Q11	Trans,MPS3904	663-00700
Q12	Trans,MPS3904	663-00700
Q13	Trans,MPS3904	663-00700
Q14	Trans,MPS3904	663-00700
Q15	Trans,MPS3904	663-00700
Q16	Trans,MPS3904	663-00700
Q17	Trans,MPS3904	663-00700
Q18	Trans,MPS3904	663-00700
Q19	Trans,MPS3904	663-00700
Q20	Trans,MPS3904	663-00700
Q21	Trans,MPS3904	663-00700
Q22	Trans,MPS3904	663-00700
Q23	Trans,MPS3904	663-00700
Q24	Trans,MPS3904	663-00700
Q25	Trans,MPS3904	663-00700
Q26	Trans,MPS3904	663-00700
Q27	Trans,MPS3904	663-00700
Q28	Trans,MPS3904	663-00700
Q29	Trans,MPS3904	663-00700
Q30	Trans,MPS3904	663-00700
Q31	Trans,MPS3904	663-00700
Q32	Trans,MPS3904	663-00700
Q33	Trans,MPS3904	663-00700
Q34	Trans,MPS3904	663-00700
Q35	Trans,MPS3904	663-00700
Q36	TrAns,MPS3906	663-00701
Q37	Trans,2N3819	663-00321
Q38	Trans,2N3819	663-00321
Q39	Trans,MPS3906	663-00701
Q40	Trans,MPS3904	663-00700
Q41	Trans,MPS3904	663-00700
Q42	Trans,MPS3906	663-00701
Q43	Trans,MPS3906	663-00701
Q44	Trans,MPS3904	663-00700
Q45	Trans,MPS3904	663-00700
Q46	Trans,2N2914	663-00347
Q47	Trans,MPS3906	663-00701
Q48	Trans,MPS3904	663-00700
Q49	Trans,MPS3906	663-00701
Q50	Trans,MPS3906	663-00701
Q51	Trans,MPS3904	663-00700
Q52	Trans,MPS3904	663-00700
Q53	Trans,2N2914	663-00347
Q54	Trans,MPS3906	663-00701
Q55	Trans,MPS3904	663-00700
Q56	Trans,MPS3904	663-00700
Q57	Trans,MPS3904	663-00700
Q58	Trans,MPS3904	663-00700
Q59	Trans,MPS3904	663-00700
Q60	Trans,MPS3904	663-00700
Q61	Trans,MPS3904	663-00700
Q62	Trans,MPS3904	663-00700
Q63	Trans,MPS3904	663-00700
Q64	Trans,MPS3904	663-00700
Q65	Trans,MPS3904	663-00700
Q66	Trans,MPS3904	663-00700
Q67	Trans,MPS3904	663-00700
R1	Res,1K,1/8W,1%	000-00000
R2	Res,1K,1/8W,1%	000-00000
R3	Res,2.05K,1/8W,1%	000-00000
R4	Res,2.05K,1/8W,1%	000-00000
R5	Res,4.02K,1/8W,1%	616-00324
R6	Res,4.02K,1/8W,1%	616-00324
R7	Res,2.05K,1/8W,1%	000-00000
R8	Res,2.05K,1/8W,1%	000-00000
R9	Res,10.1K,1/4W,.5%	000-00000
R10	Res,10.1K,1/4W,.5%	000-00000
R11	Res,20.3K,1/4W,.5%	000-00000
R12	Res,20.3K,1/4W,.5%	000-00000
R13	Res,40.2K,1/4W,.5%	000-00000
R14	Res,40.2K,1/4W,.5%	000-00000
R15	Res,20.3K,1/4W,.5%	000-00000
R16	Res,20.3K,1/4W,.5%	000-00000
R17	Res,1K,1/8W,1%	000-00000
R18	Res,1K,1/8W,1%	000-00000
R19	Res,2.05K,1/8W,1%	000-00000
R20	Res,2.05K,1/8W,1%	000-00000
R21	Res,4.02K,1/8W,1%	616-00324
R22	Res,4.02K,1/8W,1%	616-00324
R23	Res,2.05K,1/8W,1%	000-00000
R24	Res,2.05K,1/8W,1%	000-00000
R25	Res,10.1K,1/4W,.5%	000-00000
R26	Res,10.1K,1/4W,.5%	000-00000
R27	Res,20.3K,1/4W,.5%	000-00000
R28	Res,20.3K,1/4W,.5%	000-00000
R29	Res,40.2K,1/4W,.5%	000-00000
R30	Res,40.2K,1/4W,.5%	000-00000
R31	Res,20.3K,1/4W,.5%	000-00000
R32	Res,20.3K,1/4W,.5%	000-00000
R33	Res,1K,1/8W,1%	000-00000
R34	Res,10K,1/4W,5%	595-00103
R35	Res,6.2K,1/4W,5%	595-00622
R36	Res,6.2K,1/4W,5%	595-00622
R37	Res,10K,1/4W,5%	595-00103
R38	Res,10K,1/4W,5%	595-00103
R39	Res,6.2K,1/4W,5%	595-00622
R40	Res,6.2K,1/4W,5%	595-00622

CIRCUIT REFERENCE	DESCRIPTION	E-H PART NO.
R41	Res,10K,1/4W,5%	595-00103
R42	Res,24K,1/4W,5%	595-00243
R43	Res,24K,1/4W,5%	595-00243
R44	Res,24K,1/4W,5%	595-00243
R45	Res,24K,1/4W,5%	595-00243
R46	Res,24K,1/4W,5%	595-00243
R47	Res,24K,1/4W,5%	595-00243
R48	Res,24K,1/4W,5%	595-00243
R49	Res,24K,1/4W,5%	595-00243
R50	Res,10K,1/4W,5%	595-00103
R51	Res,6.2K,1/4W,5%	595-00622
R52	Res,6.2K,1/4W,5%	595-00622
R53	Res,10K,1/4W,5%	595-00103
R54	Res,10K,1/4W,5%	595-00103
R55	Res,6.2K,1/4W,5%	595-00622
R56	Res,6.2K,1/4W,5%	595-00622
R58	Res,24K,1/4W,5%	595-00243
R59	Res,24K,1/4W,5%	595-00243
R60	Res,24K,1/4W,5%	595-00243
R61	Res,24K,1/4W,5%	595-00243
R62	Res,24K,1/4W,5%	595-00243
R63	Res,24K,1/4W,5%	595-00243
R64	Res,24K,1/4W,5%	595-00243
R65	Res,24K,1/4W,5%	595-00243
R66	Res,1K,1/8W,1%	000-00000
R67	Res,3K,1/4W,5%	595-00302
R68	Res,5.1K,1/4W,5%	595-00512
R69	Res,9.53K,1/8W,1%	616-00333
R70	Res,10K,1/8W,1%	616-00334
R71	Pot,5K	551-00060
R72	Res,15K,1/8W,1%	616-00336
R74	Res,10K,1/4W,5%	595-00103
R75	Res,5.1K,1/4W,5%	595-00512
R76	Res,130K,1/4W,5%	595-00134
R77	Res,100,1/4W,5%	595-00101
R78	Pot,1K	551-00000
R79	Res,3K,1/4W,5%	596-00302
R80	Res,11K,1/4W,5%	595-00113
R81	Res,11K,1/4W,5%	595-00113
R82	Res,8.2K,1/4W,5%	595-00822
R83	Res,5.1K,1/4W,5%	595-00512
R84	Pot,50K	551-00059
R85	Res,162K,1/8W,1%	000-00000
R86	Res,10K,1/8W,1%	616-00334
R87	Res,10K,1/8W,1%	616-00334
R88	Res,10K,1/8W,1%	616-00334
R89	Res,10K,1/8W,1%	616-00334
R90	Res,10K,1/4W,5%	595-00103
R91	Res,8.2K,1/4W,5%	595-00822
R92	Res,162K,1/8W,1%	000-00000
R93	Pot,50K	551-00059
R94	Res,680,1/4W,5%	595-00681
R95	Res,270K,1/4W,5%	595-00274

CIRCUIT REFERENCE	DESCRIPTION	E-H PART NO.
R96	Res,100,1/4W,5%	595-00101
R97	Res,20K,1/4W,5%	595-00203
R98	Res,39K,1/4W,5%	595-00393
R99	Res,5.1K,1/4W,5%	595-00512
R100	Res,680,1/4W,5%	595-00681
R101	Res,12K,1/4W,5%	595-00123
R102	Res,8.2K,1/4W,5%	595-00822
R103	Pot,2K	551-00057
R104	Res,5.6K,1/4W,5%	595-00562
R105	Res,11K,1/4W,5%	595-00113
R106	Res,11K,1/4W,5%	595-00113
R107	Res,8.2K,1/4W,5%	595-00822
R108	Res,5.1K,1/4W,5%	595-00512
R109	Pot,50K	551-00059
R110	Res,162K,1/8W,1%	000-00000
R111	Res,10K,1/8W,1%	616-00334
R112	Res,10K,1/8W,1%	616-00334
R113	Res,10K,1/8W,1%	616-00334
R114	Res,10K,1/8W,1%	616-00334
R115	Res,10K,1/4W,5%	595-00103
R116	Res,8.2K,1/4W,5%	595-00822
R117	Res,162K,1/8W,1%	000-00000
R118	Pot,50K	551-00059
R119	Res,680,1/4W,5%	595-00681
R120	Res,270K,1/4W,5%	595-00274
R121	Res,100,1/4W,5%	595-00101
R122	Res,20K,1/4W,5%	595-00203
R123	Res,39K,1/4W,5%	595-00393
R124	Res,5.1K,1/4W,5%	595-00512
R125	Res,680,1/4W,5%	595-00681
R126	Res,12K,1/4W,5%	595-00123
R127	Res,8.2K,1/4W,5%	595-00822
R128	Pot,2K	551-00057
R129	Res,5.6K,1/4W,5%	595-00562
R130	Res,1K,1/4W,5%	595-00102
R131	Res,3K,1/4W,5%	595-00302
R132	Res,2.4K,1/4W,5%	595-00242
R133	Res,1K,1/4W,5%	595-00102
R134	Res,2.4K,1/4W,5%	595-00242
R135	Res,1K,1/4W,5%	595-00102
R136	Res,2.4K,1/4W,5%	595-00242
R137	Res,1K,1/4W,5%	595-00102
R139	Res,1K,1/4W,5%	595-00102
R140	Res,3K,1/4W,5%	595-00302
R141	Res,3K,1/4W,5%	595-00302
R142	Res,3K,1/4W,5%	595-00302
R143	Res,3K,1/4W,5%	595-00302
R144	Res,2.4K,1/4W,5%	595-00242
R145	Res,2.4K,1/4W,5%	595-00242
R146	Res,1K,1/4W,5%	595-00102
R147	Res,1K,1/4W,5%	595-00102
R148	Res,2K,1/4W,5%	595-00202
R149	Res,2K,1/4W,5%	595-00202
R150	Res,2K,1/4W,5%	595-00202

CIRCUIT REFERENCE	DESCRIPTION	E-H PART NO.
R151	Res,2K,1/4W,5%	595-00202
R152	Res,910,1/4W,5%	595-00911
R153	Res,1.5K,1/4W,5%	595-00152
R154	Res,2K,1/4W,5%	595-00202
R155	Res,2K,1/4W,5%	595-00202
R156	Res,2K,1/4W,5%	595-00202
R157	Res,2K,1/4W,5%	595-00202
R158	Res,910,1/4W,5%	595-00911
R159	Res,1.5K,1/4W,5%	595-00152
R160	Res,10,1/4W,5%	595-00200
R161	Res,10,1/4W,5%	595-00200
UL1	Socket,KC,14Pin	495-00040
UL1	IC,MC7400P	665-00024
UL2	Socket,KC,14Pin	495-00040
UL2	IC,MC7400P	665-00024
UL3	Socket,KC,14Pin	495-00040
UL3	IC,MC7473P	665-00000
UL4	Socket,KC,14Pin	495-00040
UL4	IC,MC7400P	665-00024
UL5	Socket,KC,14Pin	495-00040
UL5	IC,MC7400P	665-00024
UL6	Socket,KC,14Pin	495-00040
UL6	IC,MC7404P	665-00000
UL7	Socket,KC,14Pin	495-00040
UL7	IC,MC7400P	665-00024
UL8	Socket,KC,14Pin	495-00040
UL8	IC,MC7400P	665-00024
UL9	Socket,KC,14Pin	495-00040
UL9	IC,MC7404P	665-00000
UL10	Socket,KC,14Pin	495-00040
UL10	IC,MC7404P	665-00000
UL11	Socket,KC,14Pin	495-00040
UL11	IC,MC7400P	665-00024
UL12	Socket,KC,14Pin	495-00040
UL12	IC,MC7495P	665-00000
UL13	Socket,KC,14Pin	495-00040
UL13	IC,MC7495P	665-00000
UL14	Socket,KC,14Pin	495-00040
UL14	IC,MC7400P	665-00024
UL15	Socket,KC,14Pin	495-00040
UL15	IC,MC7404P	665-00000
UL16	Socket,KC,14Pin	495-00040
UL16	IC,MC7400P	665-00024
UL17	Socket,KC,14Pin	495-00040
UL17	IC,MC7404P	665-00000
UL18	Socket,KC,14Pin	495-00040
UL18	IC,MC7400P	665-00024
UL19	Socket,KC,14Pin	495-00040
UL19	IC,MC7404P	665-00000
UL20	Socket,KC,14Pin	495-00040
UL20	IC,MC7400P	665-00024
UL21	Socket,KC,14Pin	495-00040
UL21	IC,MC7404P	665-00000

CIRCUIT REFERENCE	DESCRIPTION	E-H PART NO.
5-9	PROGRAM MEMORY BOARD	401-41763
C1	Cap,.001uF	311-00305
C2	Cap,.001uF	311-00305
C3	Cap,.001uF	311-00305
C4	Cap,.001uF	311-00305
C5	Cap,.001uF	311-00305
C6	Cap,.001uF	311-00305
C7	Cap,.001uF	311-00305
C8	Cap,.0022uF	311-00309
C9	Cap,.0022uF	311-00309
C10	Cap,.0022uF	311-00309
C11	Cap,.0022uF	311-00309
C12	Cap,.0022uF	311-00309
C13	Cap,.0022uF	311-00309
C14	Cap,.0022uF	311-00309
C15	Cap,47uF,6V	000-00000
C16	Cap,1uF	318-00306
C17	Cap,.001uF	311-00305
C18	Cap,1uF	318-00306
C19	Cap,1uF	318-00306
C20	Cap,1uF	318-00306
C21	Cap,1uF	318-00306
C22	Cap,1uF	318-00306
C23	Cap,1uF	318-00306
C24	Cap,1uF	318-00306
C25	Cap,1uF	318-00306
C26	Cap,1uF	318-00306
C27	Cap,1uF	318-00306
C28	Cap,1uF	318-00306
C29	Cap,1uF	318-00306
CR1	Diode,1N4448	376-00022
Q1	Trans,MPS3904	663-00700
R1	Res,2K,1/4W,5%	595-00202
R2	Res,2K,1/4W,5%	595-00202
R3	Res,2K,1/4W,5%	595-00202
R4	Res,2K,1/4W,5%	595-00202
R5	Res,510,1/4W,5%	595-00511
R6	Res,100K,1/4W,5%	595-00104
R7	Res,510,1/4W,5%	595-00511
UL1	Socket,14Pin	495-00040
UL1	IC,MC7400P	665-00024
UL2	Socket,14Pin	495-00040
UL2	IC,MC7400P	665-00024
UL3	Socket,14Pin	495-00040
UL3	IC,MC7400P	665-00024
UL4	Socket,14Pin	495-00040
UL4	IC,MC7400P	665-00024
UL5	Socket,14Pin	495-00040
UL5	IC,MC7400P	665-00024

CIRCUIT REFERENCE	DESCRIPTION	E-H PART NO.
UL6	Socket,14Pin	495-00040
UL6	IC,MC7400P	665-00024
UL7	Socket,14Pin	495-00040
UL7	IC,MC7400P	665-00024
UL8	Socket,14Pin	495-00040
UL8	IC,MC7400P	665-00024
UL9	Socket,14Pin	495-00040
UL9	IC,MC7400P	665-00024
UL10	Socket,14Pin	495-00040
UL10	IC,MC7404P	665-00000
UL11	Socket,14Pin	495-00040
UL11	IC,MC7404P	665-00000
UL12	Socket,14Pin	495-00040
UL12	IC,MC7400P	665-00024
UL13	Socket,14Pin	495-00040
UL13	IC,MC7400P	665-00024
UL14	Socket,14Pin	495-00040
UL14	IC,MC7400P	665-00024
UL15	Socket,14Pin	495-00040
UL15	IC,MC7400P	665-00024
UL16	Socket,14Pin	495-00040
UL16	IC,MC7400P	665-00024
UL17	Socket,14Pin	495-00040
UL17	IC,MC7400P	665-00024
UL18	Socket,14Pin	495-00040
UL18	IC,MC7400P	665-00024
UL19	Socket,14Pin	495-00040
UL19	IC,N8280A	665-00026
UL20	Socket,14Pin	495-00040
UL20	IC,N8280A	665-00026
UL21	Socket,14Pin	495-00040
UL21	IC,N8280A	665-00026
UL22	Socket,14Pin	495-00040
UL22	IC,N8280A	665-00026
UL23	Socket,14Pin	495-00040
UL23	IC,N8280A	665-00026
UL24	Socket,14Pin	495-00040
UL24	IC,N8280A	665-00026
UL25	Socket,14Pin	495-00040
UL25	IC,N8280A	665-00026
UL26	Socket,14Pin	495-00040
UL26	IC,N8280A	665-00026
UL27	Socket,14Pin	495-00040
UL27	IC,MC7430P	665-00000
UL28	Socket,16Pin	495-00054
UL28	IC,MC7442P	665-00000
UL29	Socket,14Pin	495-00040
UL29	IC,N8281A	665-00027
UL30	Socket,14Pin	495-00040
UL30	IC,N8280A	665-00026
UL31	Socket,14Pin	495-00040
UL31	IC,N8280A	665-00026
UL32	Socket,14Pin	495-00040
UL32	IC,N8280A	665-00026
UL33	Socket,14Pin	495-00040

CIRCUIT REFERENCE	DESCRIPTION	E-H PART NO.
UL33	IC,N8280A	665-00026
UL34	Socket,14Pin	495-00040
UL34	IC,N8280A	665-00026
UL35	Socket,14Pin	495-00040
UL35	IC,N8280A	665-00026
UL36	Socket,14Pin	495-00040
UL36	IC,N8280A	665-00026
UL37	Socket,14Pin	495-00040
UL37	IC,N8280A	665-00026
UL38	Socket,14Pin	495-00040
UL38	IC,N8280A	665-00026
UL39	Socket,14Pin	495-00040
UL39	IC,N8280A	665-00026
UL40	Socket,14Pin	495-00040
UL40	IC,N8280A	665-00026
UL41	Socket,14Pin	495-00040
UL41	IC,N8280A	665-00026
UL42	Socket,14Pin	495-00040
UL42	IC,N8280A	665-00026
UL43	Socket,14Pin	495-00040
UL43	IC,N8280A	665-00026
UL44	Socket,14Pin	495-00040
UL44	IC,MC7400P	665-00024
UL45	Socket,14Pin	495-00040
UL45	IC,MC7404P	665-00000
UL46	Socket,14Pin	495-00040
UL46	IC,MC7400P	665-00024
UL47	Socket,14Pin	495-00040
UL47	IC,N8280A	665-00026
UL48	Socket,14Pin	495-00040
UL48	IC,N8280A	665-00026
UL49	Socket,14Pin	495-00040
UL49	IC,N8280A	665-00026
UL50	Socket,14Pin	495-00040
UL50	IC,N8280A	665-00026
UL51	Socket,14Pin	495-00040
UL51	IC.N8280A	665-00026
UL52	Socket,14Pin	495-00040
UL52	IC.N8280A	665-00026
UL53	Socket,14Pin	495-00040
UL53	IC,N8280A	665-00026
UL54	Socket,14Pin	495-00040
UL54	IC,N8280A	665-00026
UL55	Socket,14Pin	495-00040
UL55	IC,N8280A	665-00026
UL56	Socket,14Pin	495-00040
UL56	IC,N8280A	665-00026
UL57	Socket,14Pin	495-00040
UL57	IC,N8280A	665-00026
UL58	Socket,14Pin	495-00040
UL58	IC,N8280A	665-00026
UL59	Socket,14Pin	495-00040
UL59	IC,N8280A	665-00026
UL60	Socket,14Pin	495-00040
UL60	IC,N8280A	665-00026

CIRCUIT REFERENCE	DESCRIPTION	E-H PART NO.
UL61	Socket,14Pin	495-00040
UL61	IC,MC2065P	665-00000
UL62	Socket,14Pin	495-00040
UL62	IC,MC7404P	665-00000
UL63	Socket,14Pin	495-00040
UL63	IC,N8280A	665-00026
UL64	Socket,14Pin	495-00040
UL64	IC,N8280A	665-00026
UL65	Socket,14Pin	495-00040
UL65	IC,N8280A	665-00026
UL66	Socket,14Pin	495-00040
UL66	IC,N8280A	665-00026
UL67	Socket,14Pin	495-00040
UL67	IC,N8280A	665-00026
UL68	Socket,14Pin	495-00040
UL68	IC,N8280A	665-00026
5-10	**CONTROL LOGIC BOARD**	401-41766
C1	Cap,100pF	311-00353
C2	Cap,100pF	311-00353
C3	Cap,100pF	311-00353
C4	Cap,100pF	311-00353
C5	Cap,.0022uF	311-00309
C6	Cap,.0022uF	311-00309
C7	Cap,.0022uF	311-00309
C8	Cap,.0022uF	311-00309
C9	Cap,470pF	311-00335
C10	Cap,470pF	311-00335
C11	Cap,1uF	318-00306
C12	Cap,1uF	318-00306
C13	Cap,1uF	318-00306
C14	Cap,1uF	318-00306
C15	Cap,220pF	311-00063
C16	Cap,470pF	311-00335
C17	Cap,1uF	318-00306
C18	Cap,.0047uF	311-00315
C19	Cap,220pF	311-00063
C20	Cap,1uF	318-00306
C21	Cap,.0047uF	311-00315
C22	Cap,470pF	311-00335
C23	Cap,.0047uF	311-00315
C24	Cap,220pF	311-00063
C25	Cap,100pF	311-00353
C26	Cap,820pF	311-00362
C27	Cap,470pF	311-00335
C28	Cap,.0047uF	311-00315
C29	Cap,220pF	311-00063
C30	Cap,100pF	311-00353
C31	Cap,1uF	318-00306
C32	Cap,470pF	311-00335
C33	Cap,1uF	318-00306
C35	Cap,1uF	318-00306
C36	Cap,1uF	318-00306
C37	Cap,1uF	318-00306
C38	Cap,1uF	318-00306
C39	Cap,1uF	318-00306
C40	Cap,1uF	318-00306
C41	Cap,1uF	318-00306
C42	Cap,1uF	318-00306
C43	Cap,1uF	318-00306
CR1	Diode,1N4448	376-00022
CR2	Diode,1N4448	376-00022
Q1	Trans,MPS3906	663-00701
Q2	Trans,MPS3906	663-00701
Q3	Trans,MPS3906	663-00701
Q4	Trans,MPS3906	663-00701
Q5	Trans,MPS3906	663-00701
Q6	Trans,MPS3906	663-00701
Q7	Trans,MPS3906	663-00701
Q8	Trans,MPS3906	663-00701
Q9	Trans,MPS3906	663-00701
Q10	Trans,MPS3906	663-00701
Q11	Trans,MPS3906	663-00701
Q12	Trans,MPS3906	663-00701
Q13	Trans,MPS3906	663-00701
Q14	Trans,MPS3906	663-00701
Q15	Trans,MPS3906	663-00701
Q16	Trans,MPS3906	663-00701
Q17	Trans,MPS3906	663-00701
Q18	Trans,MPS3906	663-00701
Q19	Trans,MPS3906	663-00701
Q20	Trans,MPS3906	663-00701
Q21	Trans,MPS3906	663-00701
Q22	Trans,MPS3906	663-00701
Q23	Trans,MPS3906	663-00701
Q24	Trans,MPS3906	663-00701
Q25	Trans,MPS3904	663-00700
Q26	Trans,MPS3904	663-00700
Q27	Trans,MPS3904	663-00700
R1	Res,1.6M,1/4W,5%	595-00165
R2	Res,13K,1/4W,5%	595-00133
R3	Res,806K,1/4W,1%	617-00314
R4	Res,13K,1/4W,5%	595-00133
R5	Res,402K,1/4W,1%	617-00320
R6	Res,13K,1/4W,5%	595-00133
R7	Res,200K,1/8W,1%	616-00354
R8	Res,13K,1/4W,5%	595-00133
R9	Res,162K,1/8W,1%	000-00000
R10	Res,13K,1/4W,5%	595-00133
R11	Res,80.6K,1/4W,.5%	000-00000
R12	Res,13K,1/4W,5%	595-00133
R13	Res,40.2K,1/8W,.2%	000-00000
R14	Res,13K,1/4W,5%	595-00133
R15	Res,20.03K,1/8W,.1%	000-00000

CIRCUIT REFERENCE	DESCRIPTION	E-H PART NO.
R16	Res,13K,1/4W,5%	595-00133
R17	Res,16K,1/8W,.1%	000-00000
R18	Res,13K,1/4W,5%	595-00133
R19	Res,7.986K,1/8W,.05%	000-00000
R20	Res,13K,1/4W,5%	595-00133
R21	Res,3.98K,1/8W,.02%	000-00000
R22	Res,13K,1/4W,5%	595-00133
R23	Res,1.990,1/8W,.01%	000-00000
R24	Res,13K,1/4W,5%	595-00133
R25	Res,8.2K,1/4W,5%	595-00822
R26	Res,8.2K,1/4W,5%	595-00822
R27	Res,8.2K,1/4W,5%	595-00822
R28	Res,8.2K,1/4W,5%	595-00822
R29	Res,8.2K,1/4W,5%	595-00822
R30	Res,8.2K,1/4W,5%	595-00822
R31	Res,8.2K,1/4W,5%	595-00822
R32	Res,8.2K,1/4W,5%	595-00822
R33	Res,8.2K,1/4W,5%	595-00822
R34	Res,8.2K,1/4W,5%	595-00822
R35	Res,8.2K,1/4W,5%	595-00822
R36	Res,8.2K,1/4W,5%	595-00822
R37	Res,5.1K,1/4W,5%	595-00512
R38	Res,5.1K,1/4W,5%	595-00512
R39	Res,5.1K,1/4W,5%	595-00512
R40	Res,5.1K,1/4W,5%	595-00512
R41	Res,5.1K,1/4W,5%	595-00512
R42	Res,5.1K,1/4W,5%	595-00512
R43	Res,5.1K,1/4W,5%	595-00512
R44	Res,5.1K,1/4W,5%	595-00512
R45	Res,5.1K,1/4W,5%	595-00512
R46	Res,5.1K,1/4W,5%	595-00512
R47	Res,5.1K,1/4W,5%	595-00512
R48	Res,5.1K,1/4W,5%	595-00512
R49	Res,1K,1/8W,1%	616-00316
R50	Res,10K,1/4W,5%	595-00103
R51	Res,10K,1/4W,5%	595-00103
R52	Res,10K,1/4W,5%	595-00103
R53	Res,10K,1/4W,5%	595-00103
R54	Res,10K,1/4W,5%	595-00103
R55	Res,10.7K,1/4W,.5%	000-00000
R56	Res,10K,1/4W,.5%	000-00000
R57	Res,10K,1/4W,5%	595-00103
R58	Res,5.1K,1/4W,5%	595-00512
R59	Res,5.1K,1/4W,5%	595-00512
R60	Res,5.1K,1/4W,5%	595-00512
R61	Res,5.1K,1/4W,5%	595-00512
R62	Res,5.1K,1/4W,5%	595-00512
R63	Res,5.1K,1/4W,5%	595-00512
R65	Res,5.1K,1/4W,5%	595-00512
R67	Res,5.1K,1/4W,5%	595-00512
R68	Res,10M,1/4W,5%	595-00106
R69	Res,10K,1/4W,5%	595-00103
R70	Res,5.1K,1/4W,5%	595-00512
R71	Res,3.3K,1/4W,5%	595-00332
R72	Res,1K,1/4W,5%	595-00102
R73	Res,5.1K,1/4W,5%	595-00512
R74	Res,10K,1/4W,5%	595-00103
R75	Res,5.1K,1/4W,5%	595-00512
R76	Res,10K,1/4W,5%	595-00103
R77	Res,3.3K,1/4W,5%	595-00332
R78	Res,10K,1/4W,5%	595-00103
R79	Res,10K,1/4W,5%	595-00103
R80	Res,5.1K,1/4W,5%	595-00512
R81	Res,10K,1/4W,5%	595-00103
R82	Res,5.1K,1/4W,5%	595-00512
R83	Res,5.1K,1/4W,5%	595-00512
R84	Res,10K,1/4W,5%	595-00103
R85	Res,5.1K,1/4W,5%	595-00512
R86	Res,10K,1/4W,5%	595-00103
R87	Res,5.1K,1/4W,5%	595-00512
R88	Res,10K,1/4W,5%	595-00103
R89	Res,5.1K,1/4W,5%	595-00512
R90	Res,10K,1/4W,5%	595-00103
R92	Res,1K,1/4W,5%	595-00102
R93	Res,5.1K,1/4W,5%	595-00512
R94	Res,10K,1/4W,5%	595-00103
R95	Res,1K,1/4W,5%	595-00102
R98	Res,5.1K,1/4W,5%	595-00512
R99	Res,10K,1/4W,5%	595-00103
R100	Res,5.1K,1/4W,5%	595-00512
R101	Res,5.1K,1/4W,5%	595-00512
R102	Res,10K,1/4W,5%	595-00103
R104	Res,5.1K,1/4W,5%	595-00512
R105	Res,10K,1/4W,5%	595-00103
R106	Res,1K,1/4W,5%	595-00102
R107	Res,1K,1/4W,5%	595-00102
R108	Res,10K,1/4W,5%	595-00103
R109	Res,10K,1/4W,5%	595-00103
UL1	Socket,IC,14Pin	495-00040
UL1	IC,MC7430P	000-00000
UL2	Socket,IC,14Pin	495-00040
UL2	IC,MC7430P	000-00000
UL3	Socket,IC,14Pin	495-00040
UL3	IC,MC7430P	000-00000
UL4	Socket,IC,14Pin	495-00040
UL4	IC,MC7430P	000-00000
UL5	Socket,IC,14Pin	495-00040
UL5	IC,MC7400P	655-00024
UL6	Socket,IC,14Pin	495-00040
UL6	IC,MC7430P	000-00000
UL7	Socket,IC,14Pin	495-00040
UL7	IC,MC7400P	655-00024
UL8	Socket,IC,14Pin	495-00040

CIRCUIT REFERENCE	DESCRIPTION	E-H PART NO.
UL8	IC,MC7400P	655-00024
UL9	Socket,IC,14Pin	495-00040
UL9	IC,MC7404P	000-00000
UL10	Socket,IC,14Pin	495-00040
UL10	IC,MC7400P	655-00024
UL11	Socket,IC,14Pin	495-00040
UL11	IC,MC7400P	655-00024
UL12	Socket,IC,14Pin	495-00040
UL12	IC,N8280A	665-00026
UL13	Socket,IC,14Pin	495-00040
UL13	IC,N8280A	665-00026
UL14	Socket,IC,14Pin	495-00040
UL14	IC,N8280A	665-00026
UL15	Socket,IC,14Pin	495-00040
UL15	IC,MC7400P	655-00024
UL16	Socket,IC,14Pin	495-00040
UL16	IC,MC7404P	000-00000
UL17	Socket,IC,14Pin	495-00040
UL17	IC,MC7400P	655-00024
UL18	Socket,IC,14Pin	495-00040
UL18	IC,MC7400P	655-00024
UL19	Socket,IC,16Pin	495-00054
UL19	IC,MC74145	000-00000
UL20	Socket,IC,14Pin	495-00040
UL20	IC,MC3022P	000-00000
UL21	Socket,IC,14Pin	495-00040
UL21	IC,MC3022P	000-00000
UL22	Socket,IC,14Pin	495-00040
UL22	IC,MC3022P	000-00000
UL23	Socket,IC,14Pin	495-00040
UL23	IC,MC3022P	000-00000
UL24	Socket,IC,14Pin	495-00040
UL24	IC,MC7400P	655-00024
UL25	Socket,IC,14Pin	595-00040
UL25	IC,MC7473P	000-00000
UL26	Socket,IC,14Pin	495-00040
UL26	IC,MC7400P	655-00024
UL27	Socket,IC,14Pin	495-00040
UL27	IC,MC7473P	000-00000
UL28	Socket,IC,14Pin	495-00040
UL28	IC,N8280A	665-00026
UL29	Socket,IC,14Pin	495-00040
UL29	IC,MC7410P	665-00025
UL30	Socket,IC,14Pin	495-00040
UL30	IC,MC7404P	000-00000
UL31	Socket,IC,14Pin	495-00040
UL31	IC,MC7400P	655-00024
UL32	Socket,IC,14Pin	495-00040
UL32	IC,MC7404P	000-00000
UL33	Socket,IC,14Pin	495-00040
UL33	IC,MC2065P	000-00000
UL34	Socket,IC,14Pin	495-00040
UL34	IC,MC7400P	655-00024
UL35	Socket,IC,14Pin	495-00040
UL35	IC,MC7400P	655-00024
UL36	Socket,IC,14Pin	495-00040
UL36	IC,MC7400P	655-00024
UL37	Socket,IC,14Pin	495-00040
UL37	IC,MC3022P	000-00000
UL38	Socket,IC,14Pin	495-00040
UL38	IC,MC3022P	000-00000
UL39	Socket,IC,14Pin	495-00040
UL39	IC,MC3022P	000-00000
UL40	Socket,IC,14Pin	495-00040
UL40	IC,MC3022P	000-00000
UL41	Socket,IC,14Pin	495-00040
UL41	IC,MC7400P	655-00024
UL42	Socket,IC,14Pin	495-00040
UL42	IC,MC7404P	000-00000
UL4	Socket,IC,14Pin	495-00040
UL43	IC,MC7400P	655-00024
UL44	Socket,IC,14Pin	495-00024
UL44	IC,MC7400P	655-00024
UL45	Socket,IC,14Pin	495-00024
UL45	IC,MC7404P	000-00000
UL46	Socket,IC,14Pin	495-00024
UL46	IC,MC7400P	655-00024
UL47	Socket,IC,14Pin	495-00024
UL47	IC,MC7400P	655-00024
UL48	Socket,IC,14Pin	495-00024
UL48	IC,N8280A	665-00026
UL49	Socket,IC,14Pin	495-00024
UL49	IC,MC7400P	655-00024
UL50	Socket,IC,14Pin	495-00024
UL50	IC,MC7400P	655-00024
UL51	Socket,IC,14Pin	495-00024
UL51	IC,MC7400P	655-00024
UL52	Socket,IC,14Pin	495-00024
UL52	IC,N8280A	665-00026
UL53	Socket,IC,14Pin	495-00024
UL53	IC,MC7473P	000-00000
5-11	DISPLAY LOGIC BOARD	401-41769
C1	Cap,470pF	311-00335
C2	Cap,47uF,6V	000-00000
C3	Cap,100pF	311-00353
C4	Cap,100pF	311-00353
C5	Cap,820pF	311-00362
C6	Cap,100pF	311-00353
C7	Cap,150pF	311-00300
C8	Cap,30pF	311-00345
C9	Cap,1uF	318-00306
C10	Cap,1uF	318-00306
C11	Cap,100pF	311-00353
C12	Cap,150pF	311-00300
C13	Cap,200pF	311-00355
C14	Cap,100pF	311-00353
C15	Cap,820pF	311-00362

CIRCUIT REFERENCE	DESCRIPTION	E-H PART NO.
C16	Cap,100pF	311-00353
C17	Cap,330pF	311-00334
C18	Cap,4.7uF	318-00308
C19	Cap,4.7uF	318-00308
C20	Cap,4.7uF	318-00308
C21	Cap,1uF	318-00306
C22	Cap,1uF	318-00306
C23	Cap,1uF	318-00306
C24	Cap,1uF	318-00306
C25	Cap,1uF	318-00306
C26	Cap,1uF	318-00306
C27	Cap,470pF	311-00335
C28	Cap,1uF	318-00306
CR1	Diode,1N5241A	000-00000
CR2	Diode,1N4737	000-00000
CR3	Diode,1N4448	376-00022
CR4	Diode,1N4448	376-00022
CR5	Diode,1N4448	376-00022
CR6	Diode,1N4448	376-00022
CR7	Diode,1N4448	376-00022
CR8	Diode,1N4448	376-00022
CR9	Diode,1N4448	376-00022
CR10	Diode,1N4448	376-00022
CR11	Diode,1N4448	376-00022
CR12	Diode,1N4448	376-00022
CR13	Diode,1N4448	376-00022
CR14	Diode,1N4448	376-00022
CR15	Diode,1N4448	376-00022
CR16	Diode,1N4448	376-00022
CR17	Diode,1N4448	376-00022
CR18	Diode,1N4448	376-00022
CR19	Diode,1N4448	376-00022
CR20	Diode,1N4448	376-00022
CR21	Diode,1N4448	376-00022
CR22	Diode,1N4448	376-00022
CR23	Diode,1N4448	376-00022
CR24	Diode,1N4448	376-00022
CR25	Diode,1N4448	376-00022
CR26	Diode,1N4448	376-00022
CR27	Diode,1N4448	376-00022
CR28	Diode,1N4448	376-00022
CR29	Diode,1N4448	376-00022
CR30	Diode,1N4448	376-00022
CR31	Diode,1N4448	376-00022
CR32	Diode,1N4448	376-00022
CR33	Diode,1N4448	376-00022
CR34	Diode,1N4448	376-00022
CR35	Diode,1N4448	376-00022
CR36	Diode,1N4448	376-00022
CR37	Diode,1N4448	376-00022
CR38	Diode,1N4448	376-00022
CR39	Diode,1N4448	376-00022
CR40	Diode,1N4448	376-00022
CR41	Diode,1N4448	376-00022
CR42	Diode,1N4448	376-00022
CR43	Diode,1N4448	376-00022
CR44	Diode,1N4448	376-00022
CR45	Diode,1N4448	376-00022
CR46	Diode,1N4448	376-00022
CR47	Diode,1N4448	376-00022
CR48	Diode,1N4448	376-00022
CR49	Diode,1N4448	376-00022
CR50	Diode,1N4448	376-00022
CR51	Diode,1N4448	376-00022
CR52	Diode,1N4448	376-00022
CR53	Diode,1N4448	376-00022
CR54	Diode,1N4448	376-00022
CR55	Diode,1N4448	376-00022
CR56	Diode,1N4448	376-00022
CR57	Diode,1N4448	376-00022
CR58	Diode,1N4448	376-00022
CR59	Diode,1N4448	376-00022
CR60	Diode,1N4448	376-00022
CR61	Diode,1N4448	376-00022
CR62	Diode,1N4448	376-00022
CR63	Diode,1N4448	376-00022
CR64	Diode,1N4448	376-00022
CR65	Diode,1N4448	376-00022
CR66	Diode,1N4448	376-00022
CR67	Diode,1N4448	376-00022
CR68	Diode,1N4448	376-00022
CR69	Diode,1N4448	376-00022
CR70	Diode,1N4448	376-00022
CR71	Diode,1N4448	376-00022
CR72	Diode,1N4448	376-00022
CR73	Diode,1N4448	376-00022
CR74	Diode,1N4448	376-00022
CR75	Diode,1N4448	376-00022
CR76	Diode,1N4448	376-00022
CR77	Diode,1N4448	376-00022
CR78	Diode,1N4448	376-00022
CR79	Diode,1N4448	376-00022
CR80	Diode,1N4448	376-00022
CR81	Diode,1N4448	376-00022
CR82	Diode,1N4448	376-00022
CR83	Diode,1N4448	376-00022
CR84	Diode,1N4448	376-00022
CR85	Diode,1N4448	376-00022
CR86	Diode,1N4448	376-00022
CR87	Diode,1N4448	376-00022
CR88	Diode,1N4448	376-00022
CR89	Diode,1N4448	376-00022
CR90	Diode,1N4448	376-00022
CR91	Diode,1N4448	376-00022
CR92	Diode,1N4448	376-00022
CR93	Diode,1N4448	376-00022
CR94	Diode,1N4448	376-00022
CR95	Diode,1N4448	376-00022

CIRCUIT REFERENCE	DESCRIPTION	E-H PART NO.
CR96	Diode,1N4448	376-00022
CR97	Diode,1N4448	376-00022
CR98	Diode,1N4448	376-00022
CR99	Diode,1N4448	376-00022
CR100	Diode,1N4448	376-00022
CR101	Diode,1N4448	376-00022
CR102	Diode,1N4448	376-00022
CR103	Diode,1N4448	376-00022
CR104	Diode,1N4448	376-00022
CR105	Diode,1N4448	376-00022
CR106	Diode,1N4448	376-00022
CR107	Diode,1N4448	376-00022
CR108	Diode,1N4448	376-00022
CR109	Diode,1N4448	376-00022
CR110	Diode,1N4448	376-00022
CR111	Diode,1N4448	376-00022
CR112	Diode,1N4448	376-00022
CR113	Diode,1N4448	376-00022
CR114	Diode,1N4448	376-00022
CR115	Diode,1N4448	376-00022
CR116	Diode,1N4448	376-00022
CR117	Diode,1N4448	376-00022
CR118	Diode,1N4448	376-00022
CR119	Diode,1N4448	376-00022
CR120	Diode,1N4448	376-00022
CR121	Diode,1N4448	376-00022
CR122	Diode,1N4448	376-00022
CR123	Diode,1N4448	376-00022
CR124	Diode,1N4448	376-00022
CR125	Diode,1N4448	376-00022
CR126	Diode,1N4448	376-00022
CR127	Diode,1N4448	376-00022
CR128	Diode,1N4448	376-00022
CR129	Diode,1N4448	376-00022
CR130	Diode,1N4448	376-00022
CR131	Diode,1N4448	376-00022
CR132	Diode,1N4448	376-00022
CR133	Diode,1N4448	376-00022
CR134	Diode,1N4448	376-00022
CR135	Diode,1N4448	376-00022
CR136	Diode,1N4448	376-00022
CR137	Diode,1N4448	376-00022
CR138	Diode,1N4448	376-00022
CR139	Diode,1N4448	376-00022
CR140	Diode,1N4448	376-00022
CR141	Diode,1N4448	376-00022
CR142	Diode,1N4448	376-00022
CR143	Diode,1N4448	376-00022
CR144	Diode,1N4448	376-00022
CR145	Diode,1N4448	376-00022
CR146	Diode,1N4448	376-00022
CR147	Diode,1N4448	376-00022
CR148	Diode,1N4448	376-00022
CR149	Diode,1N4448	376-00022
CR150	Diode,1N4448	376-00022
CR151	Diode,1N4448	376-00022
CR152	Diode,1N4448	376-00022
CR153	Diode,1N4448	376-00022
CR154	Diode,1N4448	376-00022
CR155	Diode,1N4448	376-00022
CR156	Diode,1N4448	376-00022
CR157	Diode,1N4448	376-00022
CR158	Diode,1N4448	376-00022
CR159	Diode,1N4448	376-00022
CR160	Diode,1N4448	376-00022
CR161	Diode,1N4448	376-00022
CR162	Diode,1N4448	376-00022
CR163	Diode,1N4448	376-00022
CR164	Diode,1N4448	376-00022
CR165	Diode,1N4448	376-00022
CR166	Diode,1N4448	376-00022
CR167	Diode,1N4448	376-00022
CR168	Diode,1N4448	376-00022
CR169	Diode,1N4448	376-00022
CR170	Diode,1N4448	376-00022
CR171	Diode,1N4448	376-00022
CR172	Diode,1N4448	376-00022
CR173	Diode,1N4448	376-00022
CR174	Diode,1N4448	376-00022
CR175	Diode,1N4448	376-00022
CR176	Diode,1N4448	376-00022
CR177	Diode,1N4448	376-00022
CR178	Diode,1N4448	376-00022
CR179	Diode,1N4448	376-00022
CR180	Diode,1N4448	376-00022
CR181	Diode,1N4448	376-00022
CR182	Diode,1N4448	376-00022
CR183	Diode,1N4448	376-00022
CR184	Diode,1N4448	376-00022
CR185	Diode,1N4448	376-00022
CR186	Diode,1N4448	376-00022
CR187	Diode,1N4448	376-00022
CR188	Diode,1N4448	376-00022
CR189	Diode,1N4448	376-00022
CR190	Diode,1N4448	376-00022
CR191	Diode,1N4448	376-00022
CR192	Diode,1N4448	376-00022
CR193	Diode,1N4448	376-00022
CR194	Diode,1N4448	376-00022
CR195	Diode,1N4448	376-00022
CR196	Diode,1N4448	376-00022
CR197	Diode,1N4448	376-00022
CR198	Diode,1N4448	376-00022
J1	Connector	721-00312
J2	Connector	721-00312
Q1	Trans,MPS3904	663-00700
Q2	Trans,MPS3904	663-00700

CIRCUIT REFERENCE	DESCRIPTION	E-H PART NO.
R1	Res,3K,1/4W,5%	595-00302
R2	Res,3K,1/4W,5%	595-00302
R3	Res,3K,1/4W,5%	595-00302
R4	Res,3K,1/4W,5%	595-00302
R5	Res,3K,1/4W,5%	595-00302
R6	Res,3K,1/4W,5%	595-00302
R7	Res,3K,1/4W,5%	595-00302
R8	Res,3K,1/4W,5%	595-00302
R9	Res,2K,1/4W,5%	595-00202
R10	Res,2K,1/4W,5%	595-00202
R11	Res,2K,1/4W,5%	595-00202
R12	Res,2K,1/4W,5%	595-00202
R13	Res,2K,1/4W,5%	595-00202
R14	Res,2K,1/4W,5%	595-00202
R15	Res,2K,1/4W,5%	595-00202
R16	Res,2K,1/4W,5%	595-00202
R17	Res,2K,1/4W,5%	595-00202
R18	Res,2K,1/4W,5%	595-00202
R19	Res,2K,1/4W,5%	595-00202
R20	Res,2K,1/4W,5%	595-00202
R21	Res,300,1/4W,5%	595-00301
R22	Res,2K,1/4W,5%	595-00202
R23	Res,2K,1/4W,5%	595-00202
R24	Res,360,1/4W,5%	595-00361
R25	Res,300,1/4W,5%	595-00301
R26	Res,360,1/4W,5%	595-00361
R27	Res,300,1/4W,5%	595-00301
R28	Res,360,1/4W,5%	595-00361
R29	Res,300,1/4W,5%	595-00301
R30	Res,360,1/4W,5%	595-00361
R31	Res,300,1/4W,5%	595-00301
R32	Res,360,1/4W,5%	595-00361
R33	Res,300,1/4W,5%	595-00301
R34	Res,360,1/4W,5%	595-00361
R35	Res,300,1/4W,5%	595-00301
R36	Res,510,1/4W,5%	595-00511
R37	Res,510,1/4W,5%	595-00511
R38	Res,510,1/4W,5%	595-00511
R39	Res,510,1/4W,5%	595-00511
R40	Res,510,1/4W,5%	595-00511
R41	Res,510,1/4W,5%	595-00511
R42	Res,510,1/4W,5%	595-00511
R43	Res,10K,1/4W,5%	595-00103
R44	Res,100K,1/4W,5%	595-00104
R45	Res,510,1/4W,5%	595-00511
R46	Res,510,1/4W,5%	595-00511
R47	Res,510,1/4W,5%	595-00511
R48	Res,510,1/4W,5%	595-00511
R49	Res,510,1/4W,5%	595-00511
R50	Res,510,1/4W,5%	595-00511
R51	Res,510,1/4W,5%	595-00511
R52	Res,510,1/4W,5%	595-00511
R53	Res,3K,1/4W,5%	595-00302
R54	Res,3K,1/4W,5%	595-00302
R55	Res,3K,1/4W,5%	595-00302

CIRCUIT REFERENCE	DESCRIPTION	E-H PART NO.
R56	Res,3K,1/4W,5%	595-00302
R57	Res,3K,1/4W,5%	595-00302
R58	Res,3K,1/4W,5%	595-00302
R59	Res,3K,1/4W,5%	595-00302
R60	Res,5.1K,1/4W,5%	595-00512
R61	Res,5.1K,1/4W,5%	595-00512
R62	Res,5.1K,1/4W,5%	595-00512
R63	Res,5.1K,1/4W,5%	595-00512
R64	Res,5.1K,1/4W,5%	595-00512
R65	Res,10K,1/4W,5%	595-00103
R66	Res,5.1K,1/4W,5%	595-00512
R67	Res,10K,1/4W,5%	595-00103
R68	Res,5.1K,1/4W,5%	595-00512
R69	Res,10K,1/4W,5%	595-00103
R70	Res,10K,1/4W,5%	595-00103
R71	Res,5.1K,1/4W,5%	595-00512
R72	Res,5.1K,1/4W,5%	595-00512
R73	Res,10K,1/4W,5%	595-00103
R75	Res,5.1K,1/4W,5%	595-00512
R76	Res,10K,1/4W,5%	595-00103
R77	Res,5.1K,1/4W,5%	595-00512
R79	Res,5.1K,1/4W,5%	595-00512
R80	Res,10K,1/4W,5%	595-00103
R81	Res,5.1K,1/4W,5%	595-00512
R82	Res,10K,1/4W,5%	595-00103
R83	Res,2K,1/8W,1%	000-00000
R84	Res,1K,1/8W,1%	596-00102
R85	Res,2K,1/8W,1%	000-00000
R86	Res,1K,1/8W,1%	596-00102
R87	Res,2K,1/8W,1%	000-00000
R88	Res,1K,1/8W,1%	596-00102
R89	Res,2K,1/8W,1%	000-00000
R90	Res,2K,1/8W,1%	000-00000
R91	Res,2K,1/8W,1%	000-00000
R92	Res,1K,1/8W,1%	596-00102
R93	Res,2K,1/8W,1%	000-00000
R94	Res,1K,1/8W,1%	596-00102
R95	Res,2K,1/8W,1%	000-00000
R96	Res,2K,1/8W,1%	000-00000
R97	Res,1K,1/8W,1%	596-00102
R98	Res,1K,1/8W,1%	596-00102
R99	Res,2K,1/8W,1%	000-00000
R100	Res,2K,1/4W,5%	595-00202
R101	Pot,500	000-00000
R102	Res,1K,1/8W,1%	596-00102
R103	Res,1K,1/8W,1%	596-00102
R104	Res,2K,1/8W,1%	000-00000
R105	Res,2K,1/8W,1%	000-00000
R106	Res,1K,1/8W,1%	596-00102
R107	Res,1K,1/8W,1%	596-00102
R108	Res,1.8K,1/4W,5%	595-00182
R109	Res,1.8K,1/4W,5%	595-00182
R110	Pot,500	000-00000

CIRCUIT REFERENCE	DESCRIPTION	E-H PART NO.
R111	Pot,500	000-00000
R112	Res,2K,1/4W,5%	595-00202
R113	Res,2K,1/4W,5%	595-00202
R114	Res,300K,1/4W,5%	595-00304
R115	Res,10K,1/4W,5%	595-00103
R116	Res,1.5K,1/4W,5%	595-00152
R117	Res,10K,1/4W,5%	595-00103
R118	Res,5.1K,1/4W,5%	595-00512
R119	Res,10,1/4W,5%	595-00100
R120	Res,10,1/4W,5%	595-00100
R121	Res,10K,1/4W,5%	595-00103
UL1	Socket,IC,14Pin	495-00040
UL1	IC,MC7404P	665-00000
UL2	Socket,IC,14Pin	495-00040
UL2	IC,MC7473P	665-00000
UL3	Socket,IC,14Pin	495-00040
UL3	IC,MC7400P	665-00024
UL4	Socket,IC,14Pin	495-00040
UL4	IC,MC7400P	665-00024
UL5	Socket,IC,14Pin	495-00040
UL5	IC,MC7400P	665-00024
UL6	Socket,IC,14Pin	495-00040
UL6	IC,MC7400P	665-00024
UL7	Socket,IC,14Pin	495-00040
UL7	IC,MC7405P	665-00000
UL8	Socket,IC,14Pin	495-00040
UL8	IC,MC7473P	665-00000
UL9	Socket,IC,14Pin	495-00040
UL9	IC,MC7404P	665-00000
UL10	Socket,IC,14Pin	495-00040
UL10	IC,MC7472P	665-00000
UL11	Socket,IC,14Pin	495-00040
UL11	IC,MC7404P	665-00000
UL12	Socket,IC,14Pin	495-00040
UL12	IC,MC7473P	665-00000
UL13	Socket,IC,14Pin	495-00040
UL13	IC,MC2065P	665-00000
UL14	Socket,IC,14Pin	495-00040
UL14	IC,MC7400P	665-00024
UL15	Socket,IC,14Pin	495-00040
UL15	IC,MC7473P	665-00000
UL16	Socket,IC,14Pin	495-00040
UL16	IC,N8281A	665-00027
UL17	Socket,IC,14Pin	495-00040
UL17	IC,N8281A	665-00027
UL18	Socket,IC,14Pin	495-00040
UL18	IC,MC7473P	665-00000
UL19	Socket,IC,14Pin	495-00040
UL19	IC,MC7473P	665-00000
UL20	Socket,IC,14Pin	495-00040
UL20	IC,MC7473P	665-00000
UL21	Socket,IC,14Pin	495-00040
UL21	IC,N8281A	665-00027
UL22	Socket,IC,14Pin	495-00040
UL22	IC,MC7404P	665-00000
UL23	Socket,IC,14Pin	495-00040
UL23	Socket,IC,24Pin	000-00000
UL23	IC,1312	665-00000
UL24	Socket,IC,14Pin	495-00040
UL24	IC,MC7400P	665-00024
UL25	Socket,IC,14Pin	495-00040
UL25	IC,MC7420P	665-00000
UL26	Socket,IC,14Pin	495-00040
UL26	IC,MC3022P	665-00000
UL27	Socket,IC,14Pin	495-00040
UL27	IC,N8281A	665-00027
UL28	Socket,IC,14Pin	495-00040
UL28	IC,N8233B	665-00000
UL29	Socket,IC,14Pin	495-00040
UL29	IC,MC7420P	665-00000
UL30	Socket,IC,14Pin	495-00040
UL30	IC,MC3022P	665-00000
UL31	Socket,IC,14Pin	495-00040
UL31	IC,MC7430P	665-00000
UL32	Socket,IC,14Pin	495-00040
UL32	IC,N8233B	665-00000
UL33	Socket,IC,14Pin	495-00040
UL33	IC,N8233B	665-00000
UL34	Socket,IC,14Pin	495-00040
UL34	IC,N8233B	665-00000
UL35	Socket,IC,14Pin	495-00040
UL35	IC,MC7420P	665-00000
UL36	Socket,IC,14Pin	495-00040
UL36	IC,MC7430P	665-00000
UL37	Socket,IC,14Pin	495-00040
UL37	IC,MC7404P	665-00000
UL38	Socket,IC,14Pin	495-00040
UL38	IC,N8280A	000-00000
UL39	Socket,IC,14Pin	495-00040
UL39	IC,MC7400P	665-00024
UL40	Socket,IC,14Pin	495-00040
UL40	IC,MC7430P	665-00000
UL41	Socket,IC,14Pin	495-00040
UL41	IC,N8280A	000-00000
UL42	Socket,IC,14Pin	495-00040
UL42	IC,MC7400P	665-00024
UL43	Socket,IC,14Pin	495-00040
UL43	IC,MC7473P	665-00000
UL44	Socket,IC,14Pin	495-00040
UL44	IC,MC7473P	665-00000
UL45	Socket,IC,14Pin	495-00040
UL45	IC,MC7473P	665-00000
UL46	Socket,IC,14Pin	495-00040
UL46	IC,MC7405P	665-00000
UL47	Socket,IC,14Pin	495-00040
UL47	IC,MC7405P	665-00000
UL48	Socket,IC,14Pin	495-00040
UL48	IC,MC7405P	665-00000
UL49	Socket,IC,14Pin	495-00040
UL49	IC,EA1003	665-00000
UL50	Socket,IC,14Pin	495-00004

CIRCUIT REFERENCE	DESCRIPTION	E-H PART NO.
UL50	IC,EA1003	665-00000
UL51	Socket,IC,14Pin	495-00040
UL51	IC,EA1003	665-00000
UL52	Socket,IC,14Pin	495-00040
UL52	IC,EA1003	665-00000
UL53	Socket,IC,14Pin	495-00040
UL53	IC,EA1003	665-00000
UL54	Socket,IC,14Pin	495-00040
UL54	IC,Ea1003	665-00000
UL55	Socket,IC,14Pin	495-00040
UL55	IC,MC7473P	665-00000
UL56	Socket,IC,14Pin	495-00040
UL56	IC,MC7473P	665-00000
UL57	Socket,IC,14Pin	495-00040
UL57	IC,MC7473P	665-00000
UL58	Socket,IC,14Pin	495-00040
UL58	IC,MC7404P	665-00000
UL59	Socket,IC,14Pin	495-00040
UL59	IC,MC7401P	665-00000
UL60	Socket,IC,14Pin	495-00040
UL60	IC,MC7401P	665-00000
XT1	Crys,1MHz Cts	722-00000
5-12	COUNTER AND DRO FORMAT	401-41775
C1	Cap,470pF,500V	311-00335
C2	Cap,100pF,500V	311-00353
C3	Cap,.001uF,200V	311-00305
C4	Cap,100pF,500V	311-00353
C5	Cap,100pF,500V	311-00353
C6	Cap,100pF,500V	311-00353
C7	Cap,100pF,500V	311-00353
C8	Cap,100pF,500V	311-00353
C9	Cap,.0022uF,200V	311-00309
C10	Cap,1uF,35V	318-00306
C11	Cap,1uF,35V	318-00306
C12	Cap,1uF,35V	318-00306
C13	Cap,1uF,35V	318-00306
C14	Cap,1uF,35V	318-00306
C15	Cap,1uF,35V	318-00306
C16	Cap,1uF,35V	318-00306
C17	Cap,1uF,35V	318-00306
C18	Cap,1uF,35V	318-00306
C19	Cap,1uF,35V	318-00306
C20	Cap,1uF,35V	318-00306
C21	Cap,1uF,35V	318-00306
C22	Cap,1uF,35V	318-00306
C23	Cap,1uF,35V	318-00306
C24	Cap,1uF,35V	318-00306
C25	Cap,1uF,35V	318-00306
C26	Cap,1uF,35V	318-00306
C27	Cap,1uF,35V	318-00306
C28	Cap,1uF,35V	318-00306
C29	Cap,4.7uF,35V	318-00308

CIRCUIT REFERENCE	DESCRIPTION	E-H PART NO.
CR1	Diode,1N4448	376-00022
CR2	Diode,1N4448	376-00022
CR3	Diode,1N4448	376-00022
CR4	Diode,1N4448	376-00022
CR5	Diode,1N4448	376-00022
CR6	Diode,1N4448	376-00022
CR7	Diode,1N4448	376-00022
CR8	Diode,1N4448	376-00022
CR9	Diode,1N4448	376-00022
CR10	Diode,1N4448	376-00022
CR11	Diode,1N4448	376-00022
CR12	Diode,1N4448	376-00022
CR13	Diode,1N4448	376-00022
CR14	Diode,1N4448	376-00022
CR15	Diode,1N4448	376-00022
CR16	Diode,1N4448	376-00022
CR17	Diode,1N4448	376-00022
CR18	Diode,1N4448	376-00022
CR19	Diode,1N4448	376-00022
CR20	Diode,1N4448	376-00022
CR21	Diode,1N4448	376-00022
CR22	Diode,1N4448	376-00022
CR23	Diode,1N4448	376-00022
CR24	Diode,1N4448	376-00022
CR25	Diode,1N4448	376-00022
CR26	Diode,1N4448	376-00022
CR27	Diode,1N4448	376-00022
CR28	Diode,1N4448	376-00022
CR29	Diode,1N4448	376-00022
CR30	Diode,1N4448	376-00022
CR31	Diode,1N4448	376-00022
CR32	Diode,1N4448	376-00022
CR33	Diode,1N4448	376-00022
CR34	Diode,1N4448	376-00022
CR35	Diode,1N4448	376-00022
J1	Connector	000-00000
R1	Res,5.1K,1/4W,5%	595-00512
R2	Res,5.1K,1/4W,5%	595-00512
R3	Res,5.1K,1/4W,5%	595-00512
R4	Res,5.1K,1/4W,5%	595-00512
R5	Res,5.1K,1/4W,5%	595-00512
R6	Res,10K,1/4W,5%	595-00103
R7	Res,10K,1/4W,5%	595-00103
R8	Res,10K,1/4W,5%	595-00103
R9	Res,10K,1/4W,5%	595-00103
R10	Res,10K,1/4W,5%	595-00103
R11	Res,10K,1/4W,5%	595-00103
R12	Res,5.1K,1/4W,5%	595-00512
R13	Res,10K,1/4W,5%	595-00103
R14	Res,3K,1/4W,5%	595-00302
R15	Res,3K,1/4W,5%	595-00302

CIRCUIT REFERENCE	DESCRIPTION	E-H PART NO.
R16	Res,3K,1/4W,5%	595-00302
R17	Res,3K,1/4W,5%	595-00302
R18	Res,3K,1/4W,5%	595-00302
R19	Res,3K,1/4W,5%	595-00302
R20	Res,510,1/4W,5%	595-00511
R21	Res,510,1/4W,5%	595-00511
R22	Res,510,1/4W,5%	595-00511
R23	Res,510,1/4W,5%	595-00511
R24	Res,510,1/4W,5%	595-00511
R25	Res,510,1/4W,5%	595-00511
R26	Res,5.1K,1/4W,5%	595-00512
R27	Res,5.1K,1/4W,5%	595-00512
R28	Res,5.1K,1/4W,5%	595-00512
R29	Res,5.1K,1/4W,5%	595-00512
UL1	Socket,IC,14Pin	495-00040
UL1	IC,MC7404P	665-00000
UL2	Socket,IC,14Pin	495-00040
UL2	IC,MC7400P	665-00024
UL3	Socket,IC,14Pin	495-00040
UL3	IC,MC7473P	000-00000
UL4	Socket,IC,14Pin	495-00040
UL4	IC,MC7400P	665-00024
UL5	Socket,IC,14Pin	495-00040
UL5	IC,MC7400P	665-00024
UL6	Socket,IC,14Pin	495-00040
UL6	IC,MC7400P	665-00024
UL7	Socket,IC,14Pin	495-00040
UL7	IC,MC7430P	000-00000
UL8	Socket,IC,14Pin	495-00040
UL8	IC,MC7404P	665-00000
UL9	Socket,IC,14Pin	495-00040
UL9	IC,8280A	665-00026
UL10	Socket,IC,14Pin	495-00040
UL10	IC,MC7400P	665-00024
UL11	Socket,IC,14Pin	495-00040
UL11	IC,MC7495P	000-00000
UL12	Socket,IC,14Pin	495-00040
UL12	IC,MC7400P	665-00024
UL13	Socket,IC,14Pin	495-00040
UL13	IC,MC7400P	665-00024
UL14	Socket,IC,14Pin	495-00040
UL14	IC,8280A	665-00026
UL15	Socket,IC,14Pin	495-00040
UL15	IC,MC7400P	665-00024
UL16	Socket,IC,14Pin	495-00040
UL16	IC,MC7410P	665-00025
UL17	Socket,IC,14Pin	495-00040
UL17	IC,MC7404P	665-00000
UL18	Socket,IC,14Pin	495-00040
UL18	IC,MC7410P	665-00025
UL19	Socket,IC,14Pin	495-00040
UL19	IC,MC7404P	665-00000
UL20	Socket,IC,14Pin	495-00040
UL20	IC,MC7400P	665-00024
UL21	Socket,IC,14Pin	495-00040
UL21	IC,8280A	665-00026
UL22	Socket,IC,14Pin	495-00040
UL22	IC,MC7400P	665-00024
UL23	Socket,IC,14Pin	495-00040
UL23	IC,MC7404P	665-00000
UL24	Socket,IC,14Pin	495-00040
UL24	IC,MC7400P	665-00024
UL25	Socket,IC,14Pin	495-00040
UL25	IC,MC7400P	665-00024
UL26	Socket,IC,14Pin	495-00040
UL26	IC,MC7400P	665-00024
UL27	Socket,IC,14Pin	495-00040
UL27	IC,MC7404P	665-00000
UL28	Socket,IC,14Pin	495-00040
UL28	IC,MC7401P	665-00025
UL29	Socket,IC,16Pin	495-00054
UL29	IC,8233B	000-00000
UL30	Socket,IC,14Pin	495-00040
UL30	IC,MC7400P	665-00024
UL31	Socket,IC,14Pin	495-00040
UL31	IC,MC7420P	665-00000
UL32	Socket,IC,14Pin	495-00040
UL32	IC,MC7404P	665-00000
UL33	Socket,IC,14Pin	495-00040
UL33	IC,8280A	665-00026
UL34	Socket,IC,14Pin	495-00040
UL34	IC,MC7400P	665-00024
UL35	Socket,IC,14Pin	495-00040
UL35	IC,MC7420P	665-00000
UL36	Socket,IC,14Pin	495-00040
UL36	IC,MC7400P	665-00024
UL37	Socket,IC,14Pin	495-00040
UL37	IC,MC7473P	000-00000
UL38	Socket,IC,16Pin	495-00054
UL38	IC,8233B	000-00000
UL39	Socket,IC,14Pin	495-00040
UL39	IC,MC7400P	665-00024
UL40	Socket,IC,16Pin	495-00054
UL40	IC,MC7442P	000-00000
UL41	Socket,IC,16Pin	495-00054
UL41	IC,8233B	000-00000
UL42	Socket,IC,14Pin	495-00040
UL42	IC,MC7400P	665-00024
UL43	Socket,IC,14Pin	495-00040
UL43	IC,MC7404P	665-00000
UL44	Socket,IC,16Pin	495-00054
UL44	IC,MC7442P	000-00000
UL45	Socket,IC,14Pin	495-00040
UL45	IC,MC7401P	000-00000
UL46	Socket,IC,14Pin	495-00040
UL46	IC,MC7473P	000-00000
UL47	Socket,IC,14Pin	495-00040
UL47	IC,MC7400P	665-00024

CIRCUIT REFERENCE	DESCRIPTION	E-H PART NO.
5-13	**VERT/HORIZ HIGH VOLT**	401-41778
C1	Cap,1uF,250V	316-00086
C2	Cap,1uF	318-00306
C3	Cap,4.7uF	318-00308
C4	Cap,1uF	318-00306
C5	Cap,1uF,250V	316-00086
C6	Cap,1uF	318-00306
C7	Cap,4.7uF	318-00308
C8	Cap,1uF	318-00306
C9	Cap,.033uF	311-00325
C10	Cap,.01uF,3KV	311-00320
C11	Cap,3.3uF	318-00307
C12	Cap,3.3uF	318-00307
C13	Cap,.01uF	311-00319
C14	Cap,.01uF,3KV	311-00320
C15	Cap,.01uF,3KV	311-00320
C16	Cap,.01uF,3KV	311-00320
C17	Cap,.01uF,3KV	311-00320
C18	Cap,.001uF,3KV	331-00093
C19	Cap,.01uF,3KV	311-00320
C20	Cap,150pF	311-00300
C21	Cap,150pF	311-00300
C22	Cap,100pF	311-00353
C23	Cap,1uF	318-00306
C24	Cap,220pF	311-00063
C25	Cap,1uF	318-00306
C26	Cap,.0047uF	311-00315
C27	Cap,150pF	311-00300
C28	Cap,150pF	311-00300
C29	Cap,150pF	311-00300
C30	Cap,150pF	311-00300
C31	Cap,1uF	318-00306
CR1	Diode,1N4448	376-00022
CR2	Diode,1N4005	376-00034
CR3	Diode,25D50	378-00300
CR4	Diode,25D50	378-00300
CR5	Diode,1N5273	000-00000
CR6	Diode,1N4448	376-00022
CR7	Diode,1N4448	376-00022
CR8	Diode,1N4448	376-00022
CR9	Diode,1N4448	376-00022
CR10	Diode,1N4448	376-00022
CR11	Diode,1N4448	376-00022
CR12	Diode,1N4448	376-00022
CR13	Diode,1N4448	376-00022
CR14	Diode,1N4448	376-00022
CR15	Diode,1N4448	376-00022
CR16	Diode,1N4448	376-00022
CR17	Diode,25D50	378-00300
CR18	Diode,1N4448	376-00022

CIRCUIT REFERENCE	DESCRIPTION	E-H PART NO.
E1	Conn Pins	450-00046
E2	Conn Pins	450-00046
E3	Conn Pins	450-00046
E4	Conn Pins	450-00046
J1	Connector	721-00312
J2	Connector	721-00312
J3	Connector	721-00312
J4	Connector	721-00312
K1	Relay,12V	000-00000
K1	Berg Pac	700-00300
Q1	Trans,40374	663-00119
Q2	Trans,2N3565	663-00312
Q3	Trans,MPS3906	663-00701
Q4	Trans,2N3565	663-00312
Q5	Trans,40374	663-00119
Q6	Trans,MPS3906	663-00701
Q7	Trans,40374	663-00119
Q8	Trans,2N3565	663-00312
Q9	Trans,MPS3906	663-00701
Q10	Trans,2N3565	663-00312
Q11	Trans,40374	663-00119
Q12	Trans,MPS3906	663-00701
Q13	Trans,2N3819	663-00321
Q14	Trans,40374	663-00119
Q15	Trans,2N5551	000-00000
Q16	Trans,MPS3906	663-00701
Q17	Trans,MPS3906	663-00701
Q18	Trans,2N3904	663-00070
Q19	Trans,2N3904	663-00070
Q20	Trans,MPS3906	663-00701
Q21	Trans,MPS3906	663-00701
Q22	Trans,MPS3904	663-00700
Q23	Trans,MPS3904	663-00700
Q24	Trans,MPS3906	663-00701
Q25	Trans,2N3904	663-00070
Q26	Trans,2N4889	663-00333
Q27	Trans,2N5551	000-00000
Q28	Trans,MPS3906	663-00701
Q29	Trans,MPS3906	663-00701
Q30	Trans,2N3904	663-00070
Q31	Trans,MPS3906	663-00701
Q32	Trans,2N3904	663-00070
Q33	Trans,2N5551	000-00000
Q34	Trans,MPS3904	663-00700
R1	Rus,6K,5W,5%	610-00128
R2	Rus,6K,5W,5%	610-00128
R3	Res,1.5K,1/2W,5%	596-00152
R4	Res,1.5K,1/2W,5%	596-00152
R5	Res,510,1/4W,5%	595-00511

CIRCUIT REFERENCE	DESCRIPTION	E-H PART NO.
R16	Res,3K,1/4W,5%	595-00302
R17	Res,3K,1/4W,5%	595-00302
R18	Res,3K,1/4W,5%	595-00302
R19	Res,3K,1/4W,5%	595-00302
R20	Res,510,1/4W,5%	595-00511
R21	Res,510,1/4W,5%	595-00511
R22	Res,510,1/4W,5%	595-00511
R23	Res,510,1/4W,5%	595-00511
R24	Res,510,1/4W,5%	595-00511
R25	Res,510,1/4W,5%	595-00511
R26	Res,5.1K,1/4W,5%	595-00512
R27	Res,5.1K,1/4W,5%	595-00512
R28	Res,5.1K,1/4W,5%	595-00512
R29	Res,5.1K,1/4W,5%	595-00512
UL1	Socket,IC,14Pin	495-00040
UL1	IC,MC7404P	665-00000
UL2	Socket,IC,14Pin	495-00040
UL2	IC,MC7400P	665-00024
UL3	Socket,IC,14Pin	495-00040
UL3	IC,MC7473P	000-00000
UL4	Socket,IC,14Pin	495-00040
UL4	IC,MC7400P	665-00024
UL5	Socket,IC,14Pin	495-00040
UL5	IC,MC7400P	665-00024
UL6	Socket,IC,14Pin	495-00040
UL6	IC,MC7400P	665-00024
UL7	Socket,IC,14Pin	495-00040
UL7	IC,MC7430P	000-00000
UL8	Socket,IC,14Pin	495-00040
UL8	IC,MC7404P	665-00000
UL9	Socket,IC,14Pin	495-00040
UL9	IC,8280A	665-00026
UL10	Socket,IC,14Pin	495-00040
UL10	IC,MC7400P	665-00024
UL11	Socket,IC,14Pin	495-00040
UL11	IC,MC7495P	000-00000
UL12	Socket,IC,14Pin	495-00040
UL12	IC,MC7400P	665-00024
UL13	Socket,IC,14Pin	495-00040
UL13	IC,MC7400P	665-00024
UL14	Socket,IC,14Pin	495-00040
UL14	IC,8280A	665-00026
UL15	Socket,IC,14Pin	495-00040
UL15	IC,MC7400P	665-00024
UL16	Socket,IC,14Pin	495-00040
UL16	IC,MC7410P	665-00025
UL17	Socket,IC,14Pin	495-00040
UL17	IC,MC7404P	665-00000
UL18	Socket,IC,14Pin	495-00040
UL18	IC,MC7410P	665-00025
UL19	Socket,IC,14Pin	495-00040
UL19	IC,MC7404P	665-00000
UL20	Socket,IC,14Pin	495-00040
UL20	IC,MC7400P	665-00024
UL21	Socket,IC,14Pin	495-00040
UL21	IC,8280A	665-00026
UL22	Socket,IC,14Pin	495-00040
UL22	IC,MC7400P	665-00024
UL23	Socket,IC,14Pin	495-00040
UL23	IC,MC7404P	665-00000
UL24	Socket,IC,14Pin	495-00040
UL24	IC,MC7400P	665-00024
UL25	Socket,IC,14Pin	495-00040
UL25	IC,MC7400P	665-00024
UL26	Socket,IC,14Pin	495-00040
UL26	IC,MC7400P	665-00024
UL27	Socket,IC,14Pin	495-00040
UL27	IC,MC7404P	665-00000
UL28	Socket,IC,14Pin	495-00040
UL28	IC,MC7401P	665-00025
UL29	Socket,IC,16Pin	495-00054
UL29	IC,8233B	000-00000
UL30	Socket,IC,14Pin	495-00040
UL30	IC,MC7400P	665-00024
UL31	Socket,IC,14Pin	495-00040
UL31	IC,MC7420P	665-00000
UL32	Socket,IC,14Pin	495-00040
UL32	IC,MC7404P	665-00000
UL33	Socket,IC,14Pin	495-00040
UL33	IC,8280A	665-00026
UL34	Socket,IC,14Pin	495-00040
UL34	IC,MC7400P	665-00024
UL35	Socket,IC,14Pin	495-00040
UL35	IC,MC7420P	665-00000
UL36	Socket,IC,14Pin	495-00040
UL36	IC,MC7400P	665-00024
UL37	Socket,IC,14Pin	495-00040
UL37	IC,MC7473P	000-00000
UL38	Socket,IC,16Pin	495-00054
UL38	IC,8233B	000-00000
UL39	Socket,IC,14Pin	495-00040
UL39	IC,MC7400P	665-00024
UL40	Socket,IC,16Pin	495-00054
UL40	IC,MC7442P	000-00000
UL41	Socket,IC,16Pin	495-00054
UL41	IC,8233B	000-00000
UL42	Socket,IC,14Pin	495-00040
UL42	IC,MC7400P	665-00024
UL43	Socket,IC,14Pin	495-00040
UL43	IC,MC7404P	665-00000
UL44	Socket,IC,16Pin	495-00054
UL44	IC,MC7442P	000-00000
UL45	Socket,IC,14Pin	495-00040
UL45	IC,MC7401P	000-00000
UL46	Socket,IC,14Pin	495-00040
UL46	IC,MC7473P	000-00000
UL47	Socket,IC,14Pin	495-00040
UL47	IC,MC7400P	665-00024

CIRCUIT REFERENCE	DESCRIPTION	E-H PART NO.
5-13	**VERT/HORIZ HIGH VOLT**	401-41778
C1	Cap,1uF,250V	316-00086
C2	Cap,1uF	318-00306
C3	Cap,4.7uF	318-00308
C4	Cap,1uF	318-00306
C5	Cap,1uF,250V	316-00086
C6	Cap,1uF	318-00306
C7	Cap,4.7uF	318-00308
C8	Cap,1uF	318-00306
C9	Cap,.033uF	311-00325
C10	Cap,.01uF,3KV	311-00320
C11	Cap,3.3uF	318-00307
C12	Cap,3.3uF	318-00307
C13	Cap,.01uF	311-00319
C14	Cap,.01uF,3KV	311-00320
C15	Cap,.01uF,3KV	311-00320
C16	Cap,.01uF,3KV	311-00320
C17	Cap,.01uF,3KV	311-00320
C18	Cap,.001uF,3KV	331-00093
C19	Cap,.01uF,3KV	311-00320
C20	Cap,150pF	311-00300
C21	Cap,150pF	311-00300
C22	Cap,100pF	311-00353
C23	Cap,1uF	318-00306
C24	Cap,220pF	311-00063
C25	Cap,1uF	318-00306
C26	Cap,.0047uF	311-00315
C27	Cap,150pF	311-00300
C28	Cap,150pF	311-00300
C29	Cap,150pF	311-00300
C30	Cap,150pF	311-00300
C31	Cap,1uF	318-00306
CR1	Diode,1N4448	376-00022
CR2	Diode,1N4005	376-00034
CR3	Diode,25D50	378-00300
CR4	Diode,25D50	378-00300
CR5	Diode,1N5273	000-00000
CR6	Diode,1N4448	376-00022
CR7	Diode,1N4448	376-00022
CR8	Diode,1N4448	376-00022
CR9	Diode,1N4448	376-00022
CR10	Diode,1N4448	376-00022
CR11	Diode,1N4448	376-00022
CR12	Diode,1N4448	376-00022
CR13	Diode,1N4448	376-00022
CR14	Diode,1N4448	376-00022
CR15	Diode,1N4448	376-00022
CR16	Diode,1N4448	376-00022
CR17	Diode,25D50	378-00300
CR18	Diode,1N4448	376-00022

CIRCUIT REFERENCE	DESCRIPTION	E-H PART NO.
E1	Conn Pins	450-00046
E2	Conn Pins	450-00046
E3	Conn Pins	450-00046
E4	Conn Pins	450-00046
J1	Connector	721-00312
J2	Connector	721-00312
J3	Connector	721-00312
J4	Connector	721-00312
K1	Relay,12V	000-00000
K1	Berg Pac	700-00300
Q1	Trans,40374	663-00119
Q2	Trans,2N3565	663-00312
Q3	Trans,MPS3906	663-00701
Q4	Trans,2N3565	663-00312
Q5	Trans,40374	663-00119
Q6	Trans,MPS3906	663-00701
Q7	Trans,40374	663-00119
Q8	Trans,2N3565	663-00312
Q9	Trans,MPS3906	663-00701
Q10	Trans,2N3565	663-00312
Q11	Trans,40374	663-00119
Q12	Trans,MPS3906	663-00701
Q13	Trans,2N3819	663-00321
Q14	Trans,40374	663-00119
Q15	Trans,2N5551	000-00000
Q16	Trans,MPS3906	663-00701
Q17	Trans,MPS3906	663-00701
Q18	Trans,2N3904	663-00070
Q19	Trans,2N3904	663-00070
Q20	Trans,MPS3906	663-00701
Q21	Trans,MPS3906	663-00701
Q22	Trans,MPS3904	663-00700
Q23	Trans,MPS3904	663-00700
Q24	Trans,MPS3906	663-00701
Q25	Trans,2N3904	663-00070
Q26	Trans,2N4889	663-00333
Q27	Trans,2N5551	000-00000
Q28	Trans,MPS3906	663-00701
Q29	Trans,MPS3906	663-00701
Q30	Trans,2N3904	663-00070
Q31	Trans,MPS3906	663-00701
Q32	Trans,2N3904	663-00070
Q33	Trans,2N5551	000-00000
Q34	Trans,MPS3904	663-00700
R1	Rus,6K,5W,5%	610-00128
R2	Rus,6K,5W,5%	610-00128
R3	Res,1.5K,1/2W,5%	596-00152
R4	Res,1.5K,1/2W,5%	596-00152
R5	Res,510,1/4W,5%	595-00511

CIRCUIT REFERENCE	DESCRIPTION	E-H PART NO.
R6	Pot,500	000-00000
R7	Res,20K,1/4W,5%	595-00203
R8	Res,560,1/4W,5%	595-00561
R9	Res,560,1/4W,5%	595-00561
R10	Res,3K,1/4W,5%	595-00302
R11	Rus,6K,5W,5%	610-00128
R12	Res,150,1/4W,5%	595-00151
R13	Pot,500	000-00000
R14	Res,470,1/4W,5%	595-00471
R15	Res,20K,1/4W,5%	595-00203
R16	Res,470,1/4W,5%	595-00471
R17	Rus,6K,5W,5%	610-00128
R18	Res,2K,1/4W,5%	595-00202
R19	Pot,5K	551-00060
R20	Res,8.2K,1/4W,5E	595-00822
R21	Res,1K,1/4W,5%	595-00102
R22	Res,82K,1/4W,5%	595-00823
R23	Res,10K,1/4W,5%	595-00103
R24	Pot,100K	551-00056
R25	Res,620K,1/4W,5%	595-00624
R26	Res,6M,1%,7.5KV	000-00000
R27	Res,1M,1W,5%	597-00105
R28	Res,20K,1/2W,5%	596-00203
R29	Res,22M,1/4W,5%	595-00226
R30	Res,22M,1/4W,5%	595-00226
R31	Pot,100K	551-00056
R32	Pot,100K	551-00056
R33	Res,4.7,2W,5%	598-00047
R34	Res,510,1/4W,5%	595-00511
R35	Res,10K,1/2W,5%	596-00103
R36	Res,1K,1/4W,5%	595-00102
R37	Res,1K,1/4W,5%	595-00102
R38	Res,51K,1/4W,5%	595-00513
R39	Res,20K,1/4W,5%	595-00203
R40	Res,1.5K,1/4W,5%	595-00152
R41	Res,3.3K,1/4W,5%	595-00332
R42	Res,3.3K,1/4W,5%	595-00332
R43	Res,1.5K,1/4W,5%	595-00152
R44	Res,20K,1/4W,5%	595-00203
R45	Res,51K,1/4W,5%	595-00513
R46	Res,10,1/4W,5%	595-00100
R47	Pot,50K	551-00059
R48	Res,100K,1/4W,5%	595-00104
R49	Res,51K,1/4W,5%	595-00513
R50	Res,10K,1/4W,5%	595-00103
R51	Pot,5K	551-00060
R52	Res,2.4K,1/4W,5%	595-00242
R53	Res,5.1K,1/4W,5%	595-00512
R54	Res,5.1K,1/4W,5%	595-00512
R55	Res,27K,1/4W,5%	595-00273
R56	Res,10K,1/4W,5%	595-00103
R57	Res,3.3K,1/4W,5%	595-00332
R58	Res,3.3K,1/4W,5%	595-00332
R59	Res,3K,3W,5%	000-00000
R60	Pot,5K	551-00060
R61	Res,12K,5W,5%	610-00127
R62	Res,2.7K,1/4W,5%	595-00272
R63	Res,3.9K,1/4W,5%	595-00392
R64	Res,20K,1/4W,5%	595-00203
R65	Res,4.7K,1/4W,5%	595-00472
R66	Res,3.3K,1/4W,5%	595-00332
R67	Res,3.3K,1/4W,5%	595-00332
R68	Res,20K,1/4W,5%	595-00203
R69	Res,1K,1/4W,5%	595-00102
R70	Pot,5K	551-00060
R71	Res,30K,1/4W,5%	595-00303
R72	Res,3.3K,1/4W,5%	595-00332
R73	Res,12K,1/4W,5%	595-00123
R74	Res,10K,1/4W,5%	595-00103
R75	Res,3.3K,1/4W,5%	595-00332
R76	Res,4.7,2W,5%	598-00047
R77	Res,3K,1/4W,5%	595-00302
R78	Res,1K,1/4W,5%	595-00102
T1	Transf,HiV	650-00302
UL1	Socset,IC,14Pin	495-00040
UL1	IC,MC7473P	000-00000
UL2	Socset,IC,14Pin	495-00040
UL2	IC,MC7400P	665-00024
UL3	Socset,IC,14Pin	495-00040
UL3	IC,MC7404P	000-00000
UL4	Socset,IC,14Pin	495-00040
UL4	IC,MC7400P	665-00024
UL5	Socset,IC,14Pin	495-00040
UL5	IC,MC7420P	000-00000
UL6	Socset,IC,14Pin	495-00040
UL6	IC,MC7400P	665-00024
UL7	Socset,IC,14Pin	495-00040
UL7	IC,MC7400P	665-00024
UL8	Socset,IC,14Pin	495-00040
UL8	IC,MC7400P	665-00024
UL9	Socset,IC,14Pin	495-00040
UL9	IC,MC7404P	000-00000
UL10	Socset,IC,14Pin	495-00040
UL10	IC,MC7400P	665-00024
5-14	**LOW VOLTAGE POWER SUPPLY**	401-41781
C1	Cap,8uF,50V	316-00310
C2	Cap,20uF,250V	316-00085
C3	Cap,.047uF	311-00228
C4	Cap,.033uF	311-00325
C5	Cap,.001uF	311-00305
C6	Cap,4.7uF	318-00308
C7	Cap,4.7uF	318-00308
C8	Cap,.033uF	311-00325
C9	Cap,18uF,35V	318-00035
C10	Cap,220pF	311-00063

CIRCUIT REFERENCE	DESCRIPTION	E-H PART NO.
C11	Cap,100uF,25V	316-00035
C12	Cap,18uF,35V	318-00035
C13	Cap,1uF	318-00306
C14	Cap,.047uF	311-00228
C15	Cap,4.7uF	318-00308
C16	Cap,4.7uF	318-00308
C17	Cap,.22uF	320-00302
CR1	Diode,VS647	376-00310
CR2	Diode,1N4005	376-00034
CR3	Diode,22V,5%	374-00063
CR4	Diode,Zener	374-00079
CR5	Diode,VS647	376-00310
CR6	Diode,1N4005	376-00034
CR7	Diode,VS647	376-00310
Q1	Trans,2N4889	663-00333
Q2	Trans,2N3440	663-00311
Q3	Trans,2N3440	663-00311
Q4	Trans,MPS3906	663-00701
Q5	Trans,2N3568	663-00314
Q6	Trans,2N2914	663-00347
Q7	Trans,MPS3904	663-00700
Q8	Trans,2N3568	663-00314
Q9	Trans,2N3568	663-00314
Q10	Trans,2N2914	663-00347
Q11	Trans,MPS3904	663-00700
Q12	Trans,MJE520	000-00000
Q13	Trans,2N3646	663-00319
Q14	Trans,2N3568	663-00314
Q15	Trans,2N2914	663-00347
Q16	Trans,MPS3906	663-00701
Q17	Trans,MPS3906	663-00701
Q18	Trans,MPS3906	663-00701
Q19	Trans,MPS3906	663-00701
Q20	Trans,MPS3906	663-00701
R1	Res,15,2W,5%	610-00000
R2	Res,4.7K,1/4W,5%	595-00472
R3	Res,82K,1/4W,5%	595-00822
R4	Res,180K,1/4W,5%	595-00184
R5	Res,1M,1/4W,5%	595-00105
R6	Res,240,1/4W,5%	595-00241
R7	Res,1.8M,1/4W,5%	595-00185
R8	Res,4.7K,1/4W,5%	595-00472
R9	Res,1.5,2W,5%	610-00307
R10	Res,165K,1/2W,1%	618-00105
R11	Pot,2K	551-00057
R12	Res,6.81K,1/8W,1%	616-00000
R13	Res,39K,1/4W,5%	595-00393
R14	Res,130K,1/2W,5%	596-00134
R15	Res,30K,1/4W,5%	595-00303

CIRCUIT REFERENCE	DESCRIPTION	E-H PART NO.
R16	Res,4.7K,1/4W,5%	595-00472
R17	Res,560K,1/4W,5%	595-00564
R18	Res,150K,1/4W,5%	595-00153
R19	Res,270K,1/2W,5%	596-00274
R20	Res,4.7K,1/4W,5%	595-00472
R21	Res,.43,2W,5%	610-00000
R22	Res,15K,1/8W,1%	616-00000
R23	Res,4.99K,1/8W,1%	616-00327
R24	Res,4.7K,1/4W,5%	595-00472
R25	Res,165K,1/2W,1%	618-00105
R26	Res,4.99K,1/8W,1%	616-00327
R27	Res,2.4,2W,5%	610-00000
R28	Res,240K,1/4W,5%	595-00244
R29	Res,75K,1/4W,5%	595-00753
R30	Res,5.1K,1/4W,5%	595-00512
R31	Res,165K,1/2W,1%	618-00105
R32	Res,4.99K,1/8W,1%	616-00327
R33	Res,3.9K,1/4W,5%	595-00392
R34	Res,.1,2W,5%	610-00123
R35	Res,51K,1/4W,5%	595-00513
R36	Res,4.7K,1/4W,5%	595-00472
R37	Res,1,2W,5%	598-00011
R38	Res,20K,1/8W,1%	616-00000
R39	Res,169K,1/2W,1%	618-00106
R40	Res,20K,1/tW,5%	595-00203
R41	Res,20K,1/tW,5%	595-00203
R42	Res,4.7K,1/4W,5%	595-00472
R44	Res,100,1/4W,5%	595-00101
R45	Res,100,1/4W,5%	595-00101
5-15	SWITCH ASSEMBLY	625-41869
C201	Cap,.01uF	311-00319
C202	Cap,.01uF	311-00319
J201	Conn,Minn	721-00050
J202	Conn,Minn	721-00050
J203	Conn,Minn	721-00050
J204	Conn,Minn	721-00050
L201	Core,Ferrite	361-00305
L202	Core,Ferrite	361-00305
L203	Core,Ferrite	361-00305
R216	Res,47,1/4W,5%	594-00470
T201	Transf,Bif,6T	651-41886
T202	Transf,Bif,6T	651-41886
T203	Transf,Bif,6T	651-41886
T204	Transf,Bif,6T	651-41886
T205	Transf,Bif,6T	000-00000

CIRCUIT REFERENCE	DESCRIPTION	E-H PART NO.
5-16	**POTENTIOMETER ASSEMBLY**	550-41873
R214	Pot,500,10M145	550-00000
R215	Res,220,1/4W,5%	594-00221
5-17	**POTENTIOMETER ASSEMBLY, DC**	550-41874
R212	Pot,5K,10M143	550-00000
R213	Res,2.4K,1/4W,5%	595-00242
5-18	**POTENTIOMETER ASSY, A & B**	550-41875
R206	Pot,500,10M144	550-00000
R207	Res,200,1/4W,5%	595-00201
R208	Pot,500,10M144	550-00000
R209	Res,200,1/4W,5%	595-00201
5-19	**POTENTIOMETER ASSY HORIZONTAL**	550-41876
R210	Pot,5K,2W	550-00003
R211	Res,6.8K,1/4W,5%	595-00682
5-20	**PROG LINES TERMINAL**	693-41884
P103	Conn,DBM25P	700-00304
R201	Res,470,1/4W,5%	595-00471
R202	Res,470,1/4W,5%	595-00471
R203	Res,470,1/4W,5%	595-00471
R204	Res,470,1/4W,5%	595-00471
R205	Res,470,1/4W,5%	595-00471
R206	Res,470,1/4W,5%	595-00471
R207	Res,470,1/4W,5%	595-00471
R208	Res,470,1/4W,5%	595-00471
5-21	**CABLE, ANALOG ASSEMBLY**	706-41931
J106	Conn,DCM37S	700-00306
J107	Conn,12Pin	700-00309
J108	Conn,12Pin	700-00309

SECTION 6
DRAWINGS

6-1 GENERAL INFORMATION

This section of the manual contains drawings of the subassemblies of the System 1010 and the Type 941 and 942 Remote Sampling Units. The drawings list interconnections between circuit boards, show location of components on the boards, and contain schematic diagrams of the boards. Theory of operation is located in Section 3 of this manual and the parts list is located in Section 5. The drawings are in numerical order by assembly designation, beginning with A1 and ending with A9 for the System 1010, and followed by schematic and component location diagrams for the Type 941 and 942 Remote Sampling Units.

6-2 SCHEMATIC DIAGRAMS

In the schematics, the convention of signal flow from left to right is followed whenever practicable. Component symbology and nomenclature follow generally-accepted practice. Resistance is given in ohms. Inductance and capacitance units (i.e., microhenries, millihenries, picofarads, microfarads) are noted with the numerical value.

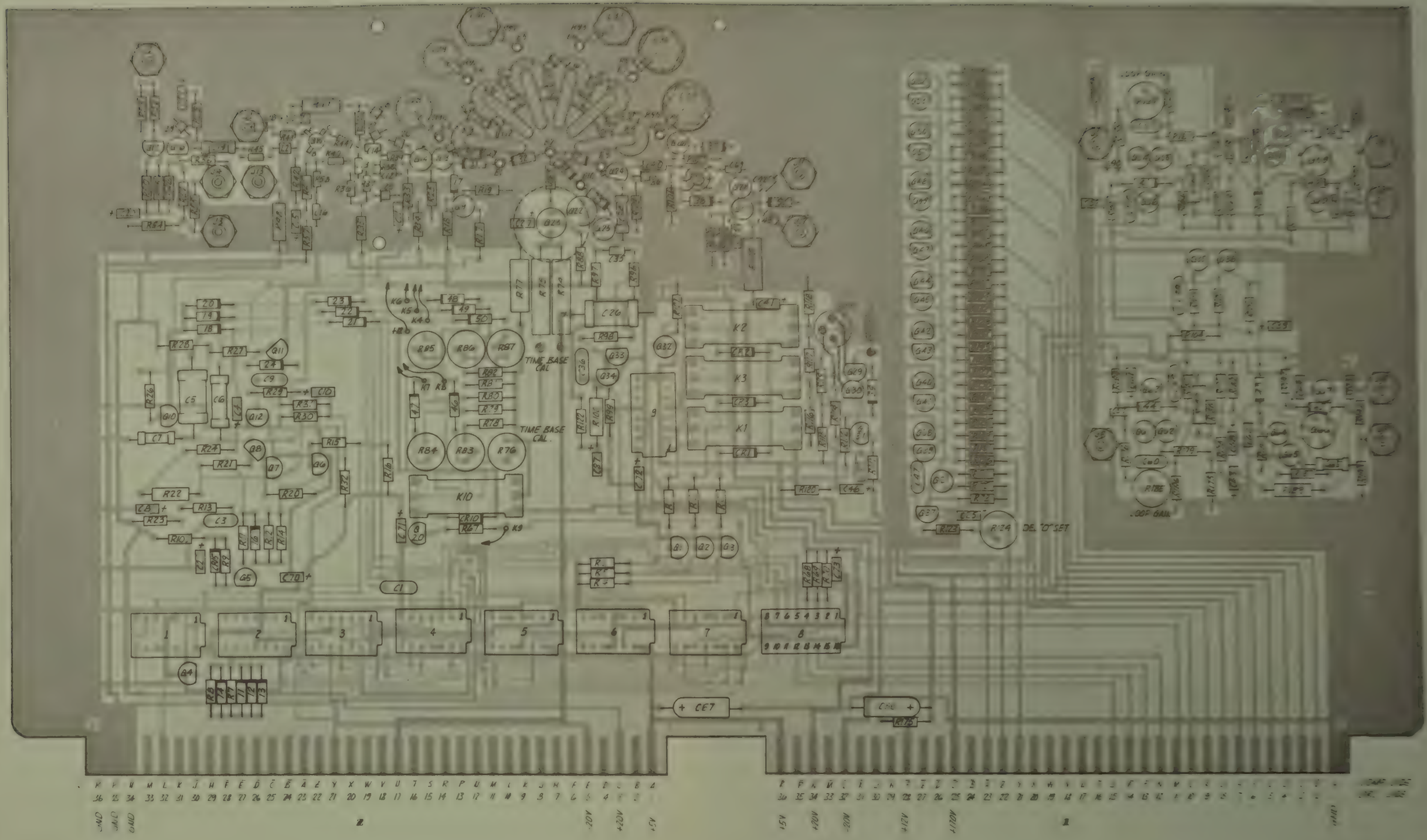

D-401-41754C

SAMPLER

SAMPLER A1

D-140-41753D

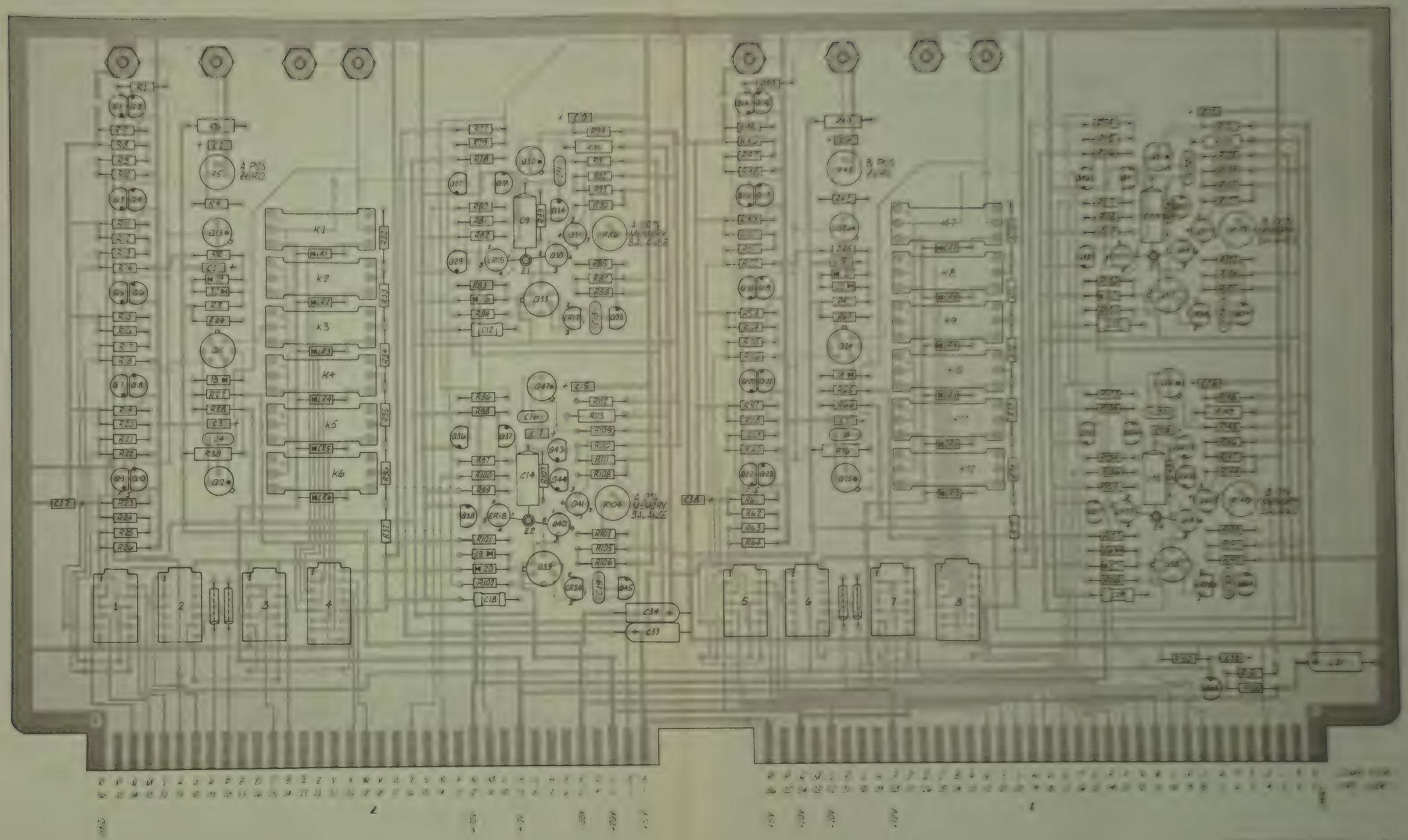

PRE-AMP MEMORY A2

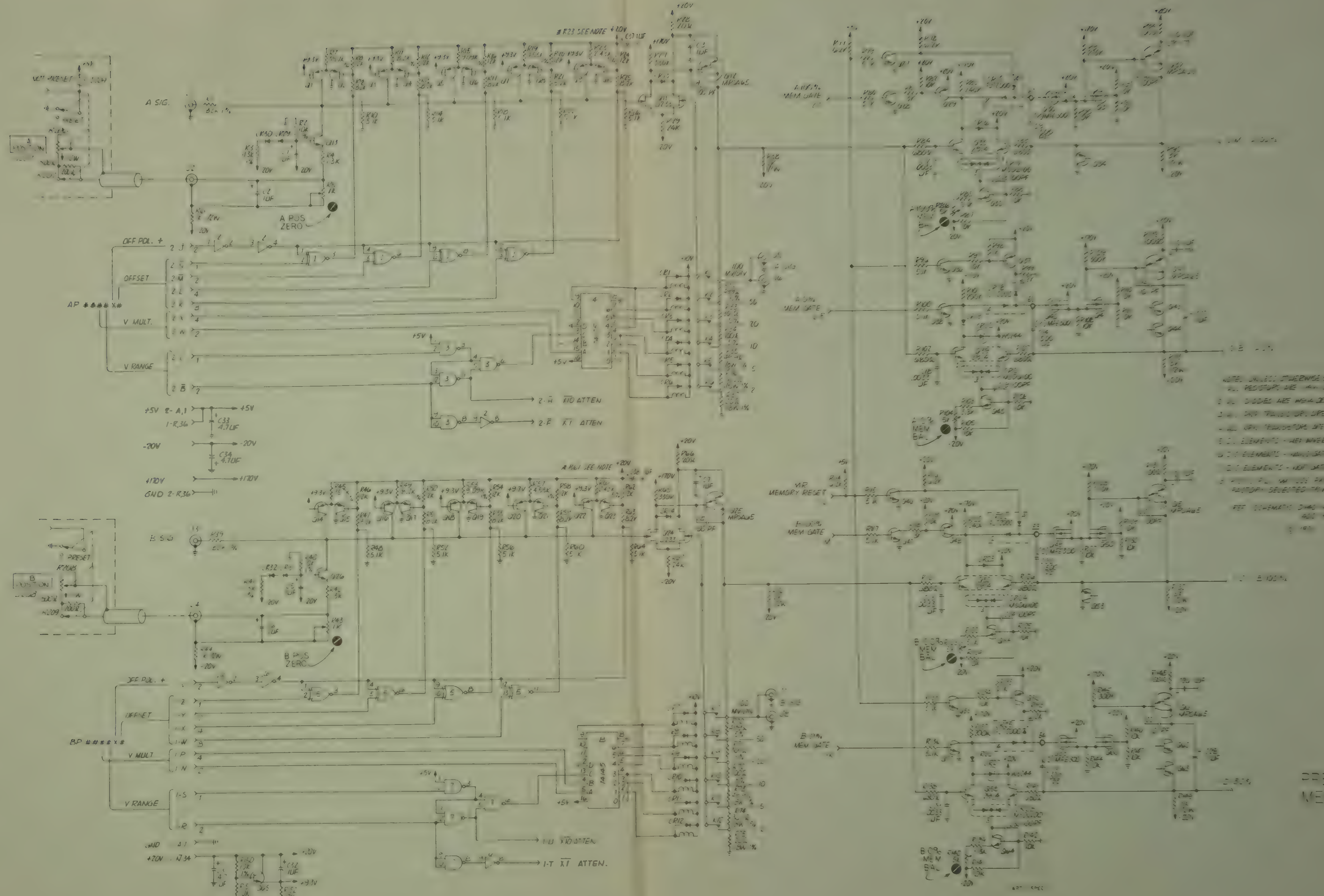
A SIG.
B SIG.
A POS ZERO
B POS ZERO
OFF POL. +
OFFSET
V MULT.
V RANGE
+170V
-20V
+5V
PRE-AMP
MEMORY A2

D-140-41756E

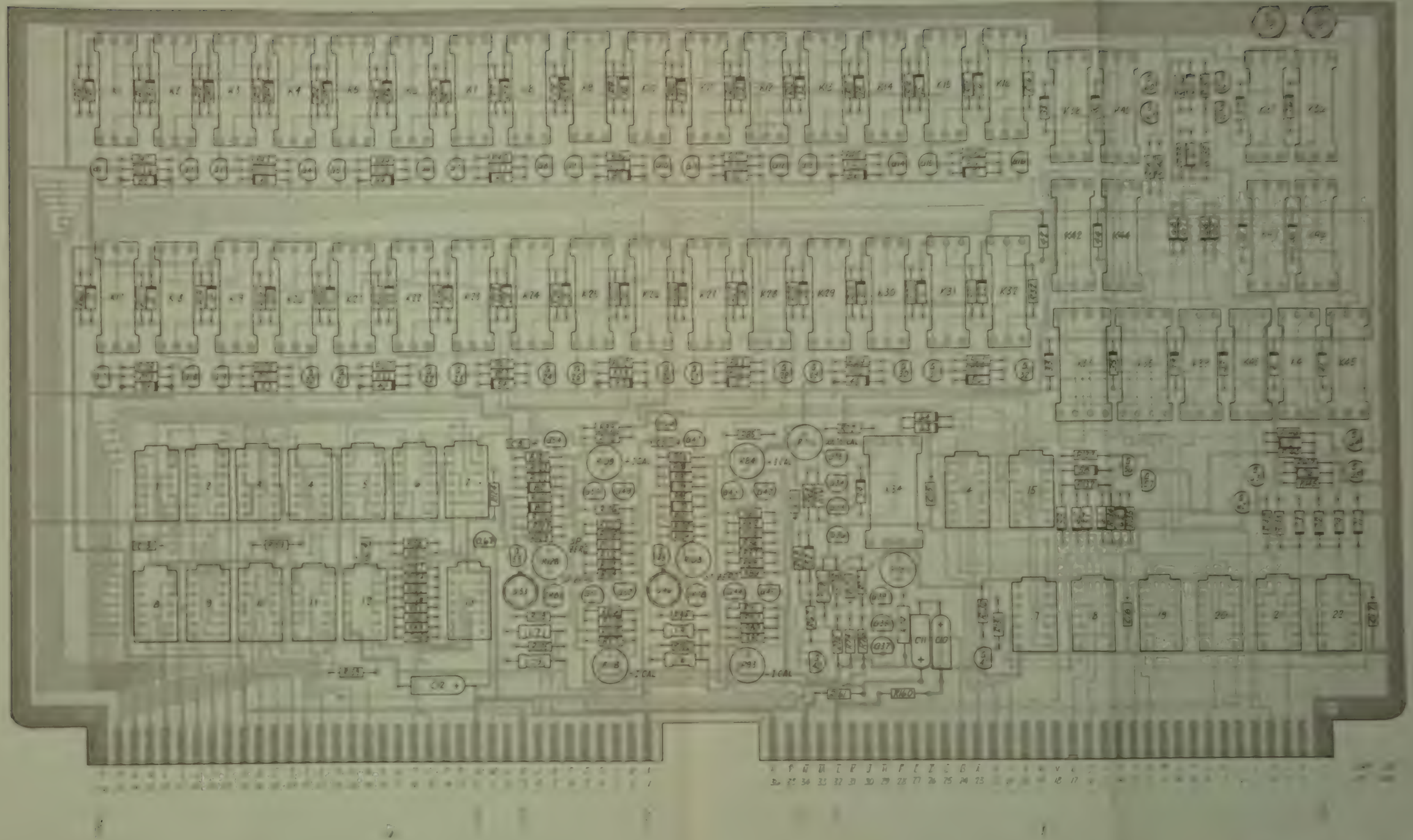

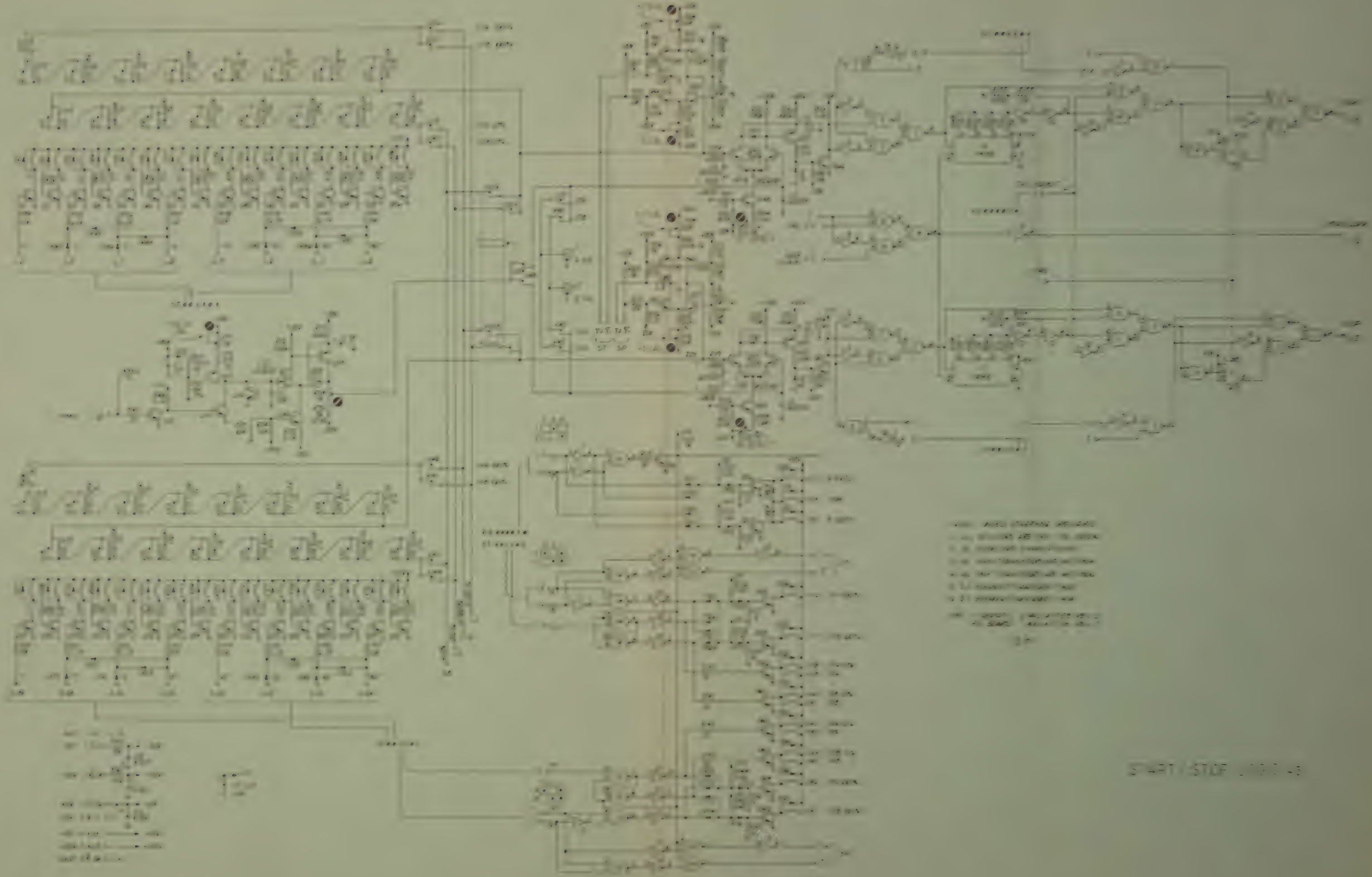

D-140-41759D

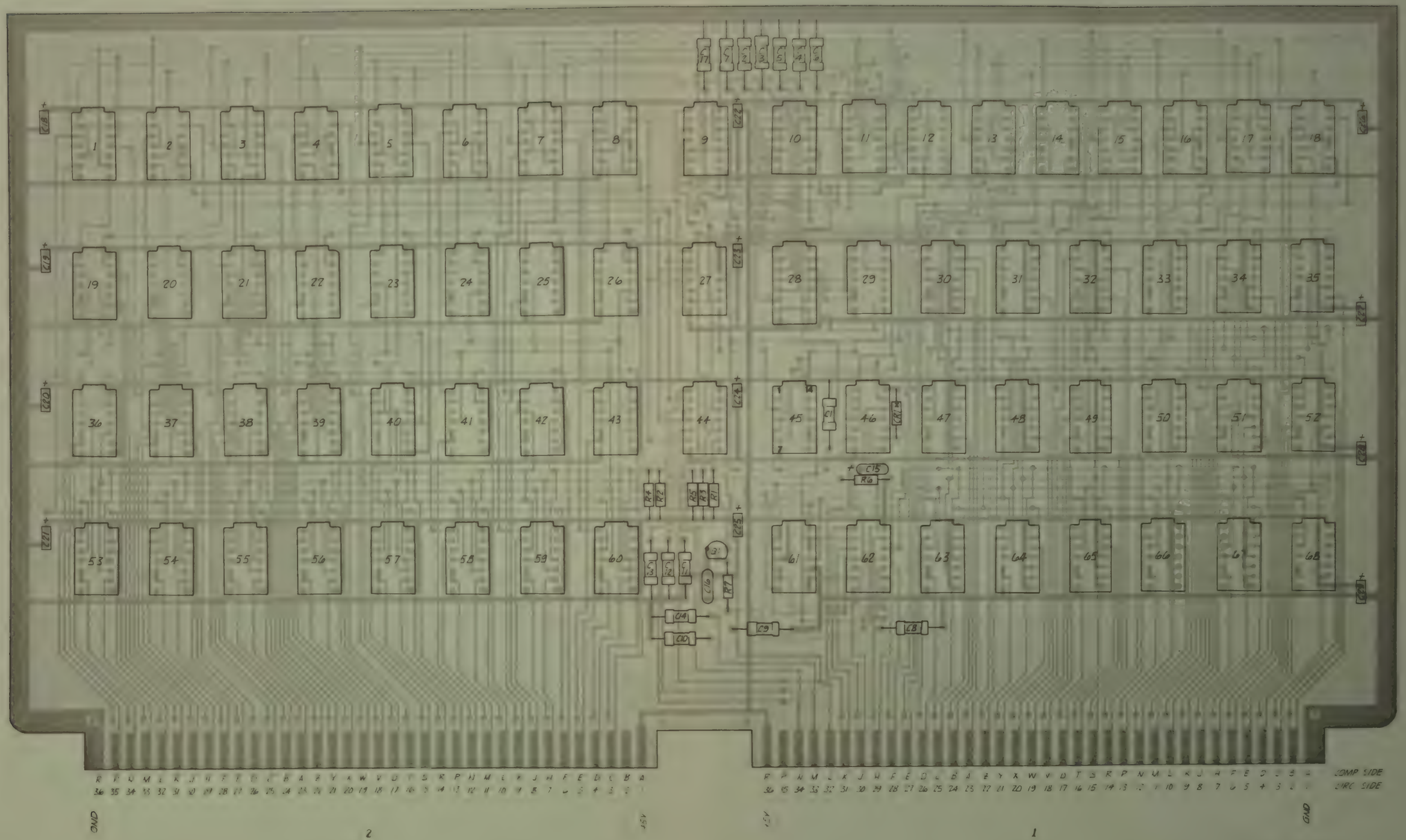

PROGRAM MEMORY A4

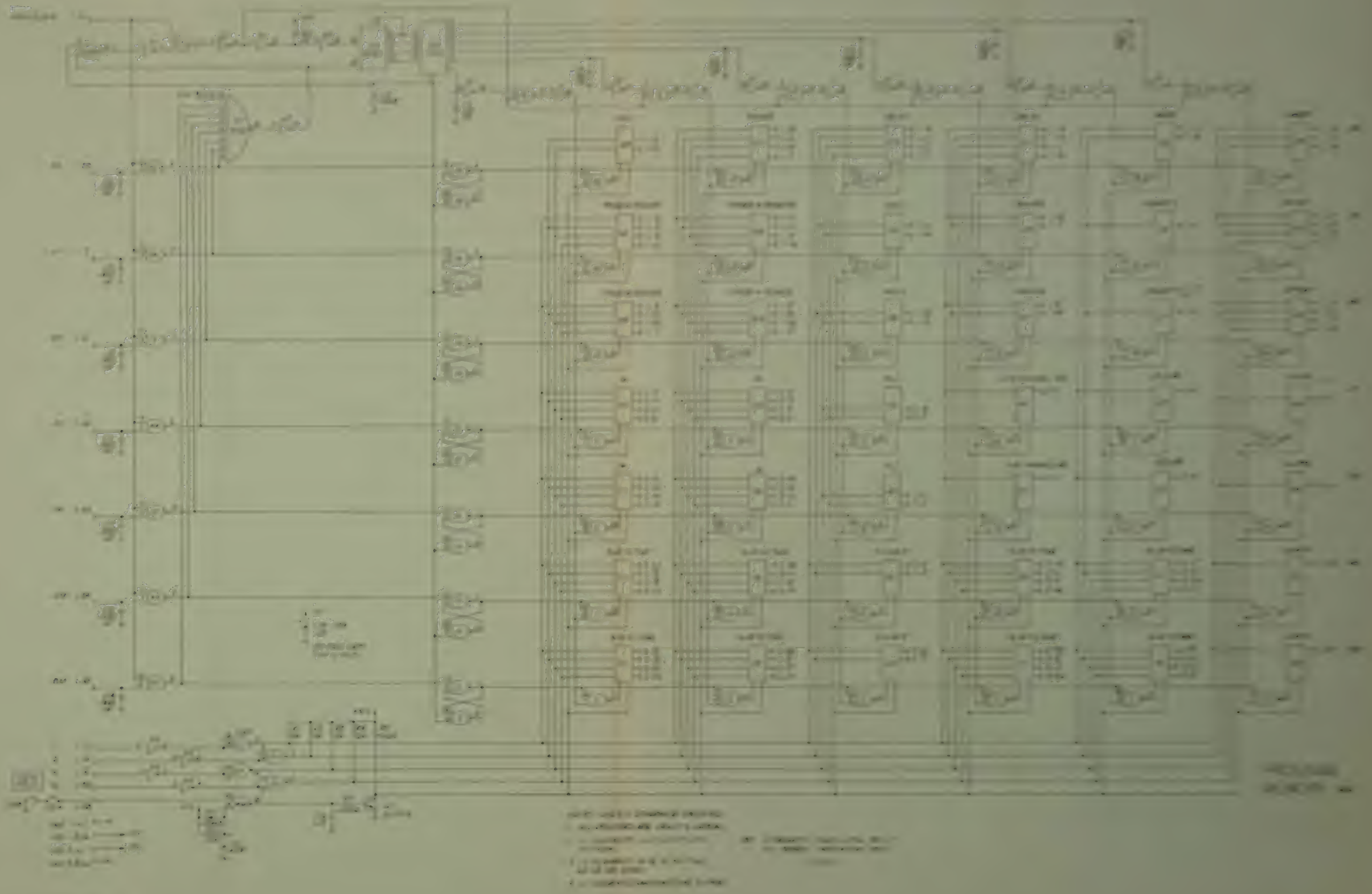

D-140-41762D

NOTE Q1-Q24 ARE MPS3906 TRANSISTORS
TO-92 PACKAGE W/BASE LEAD ON ROUND SIDE.

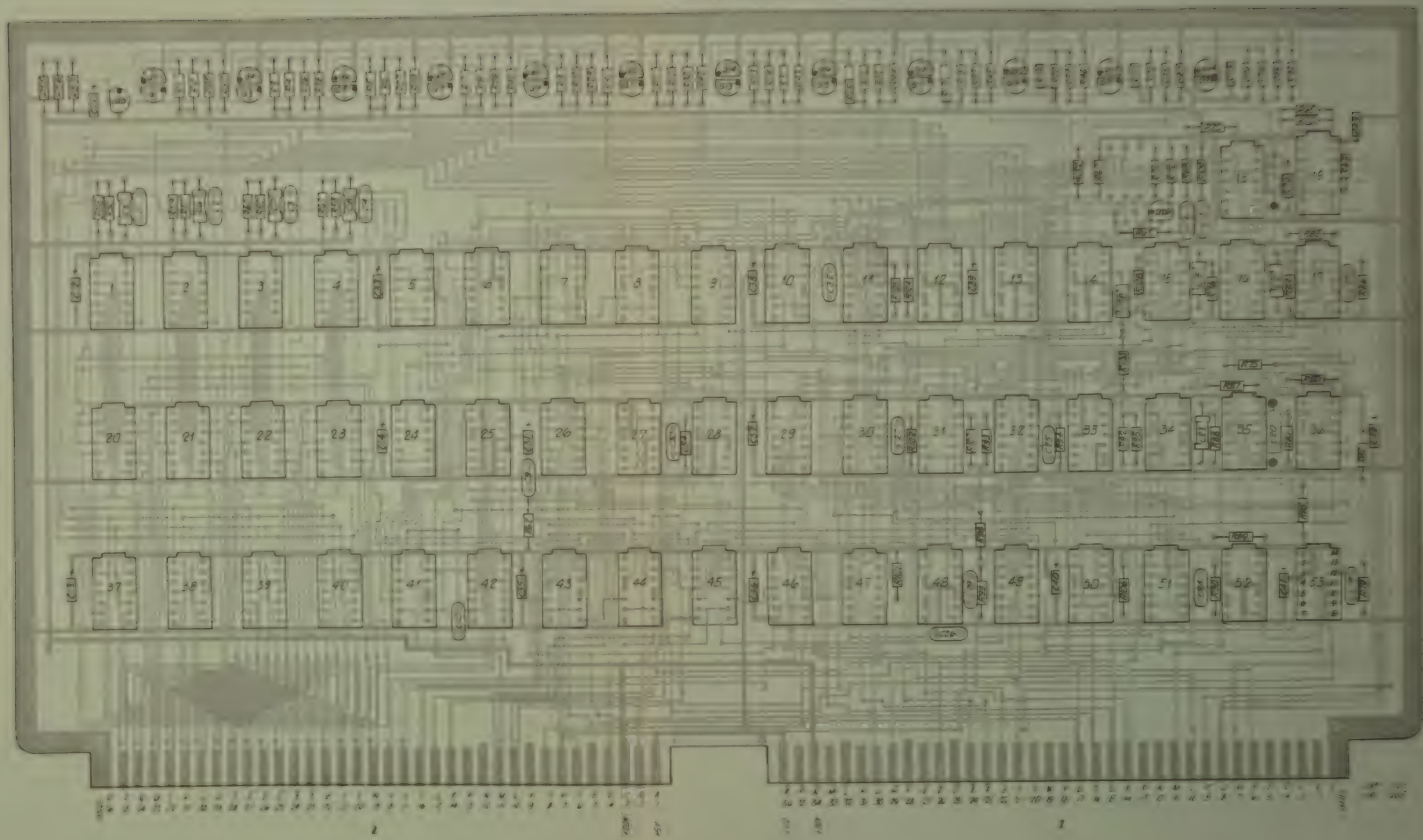

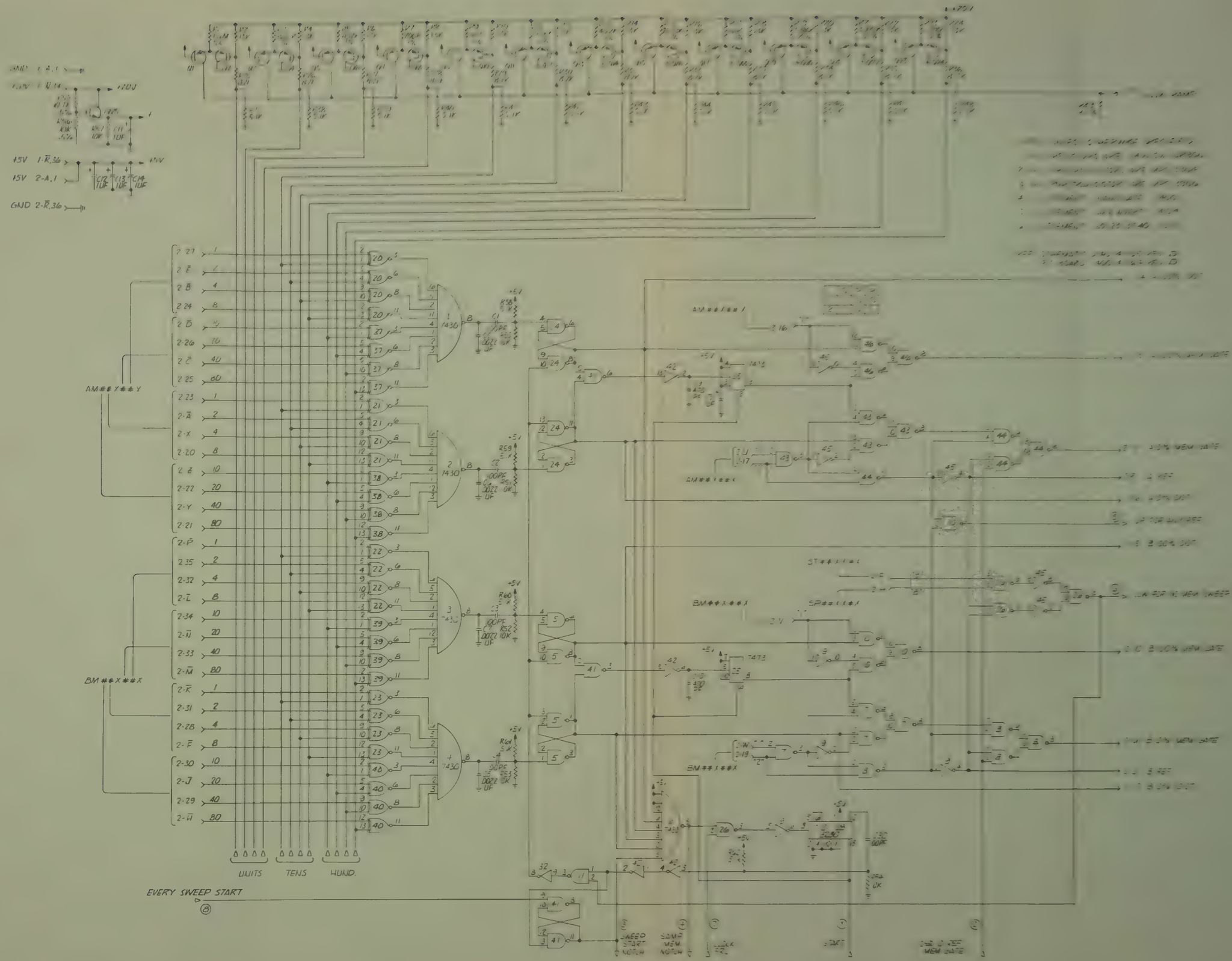

D-140-41765D

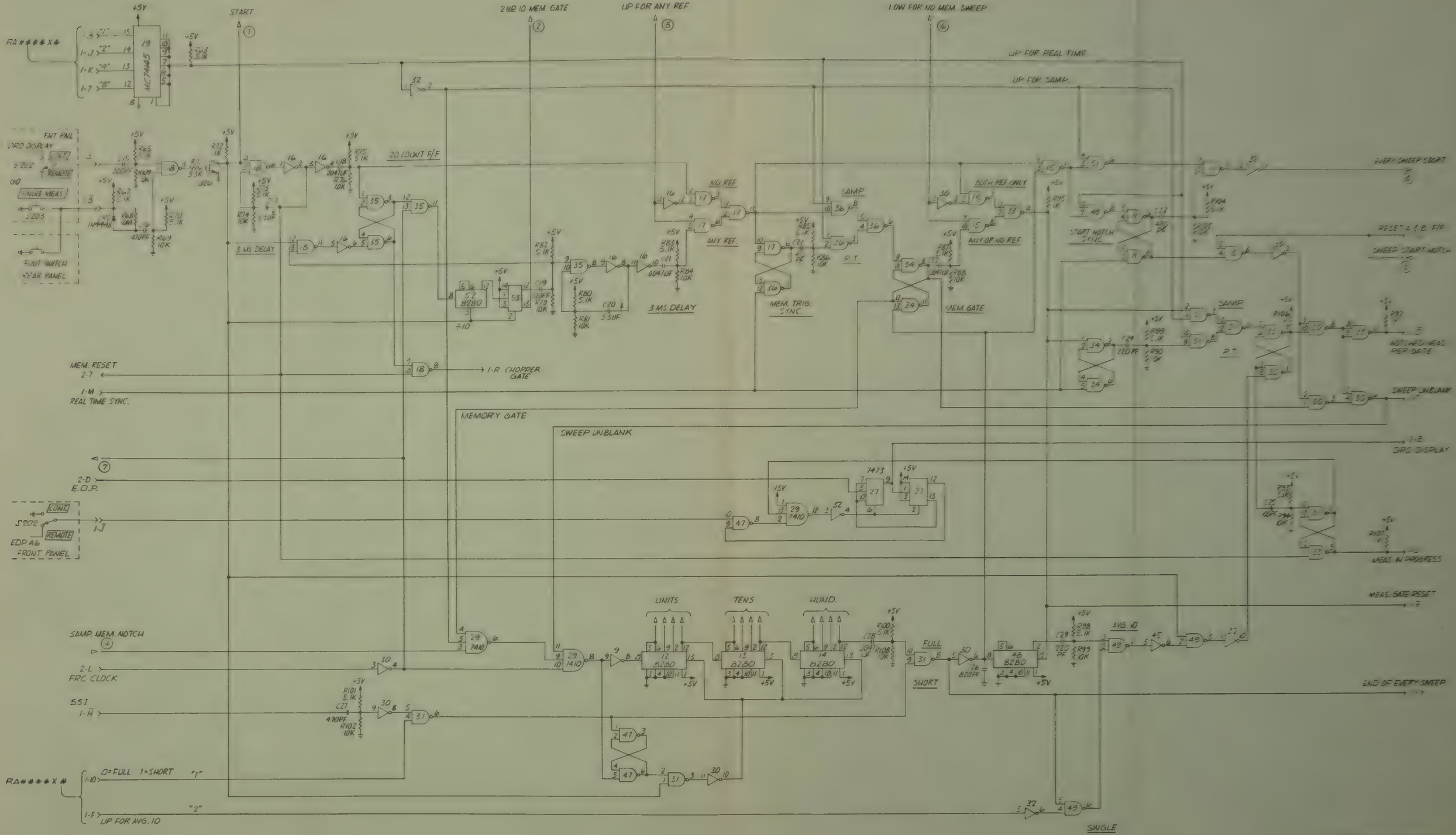

CONTROL LOGIC

D-140-41765D

SHEET 2 OF 2

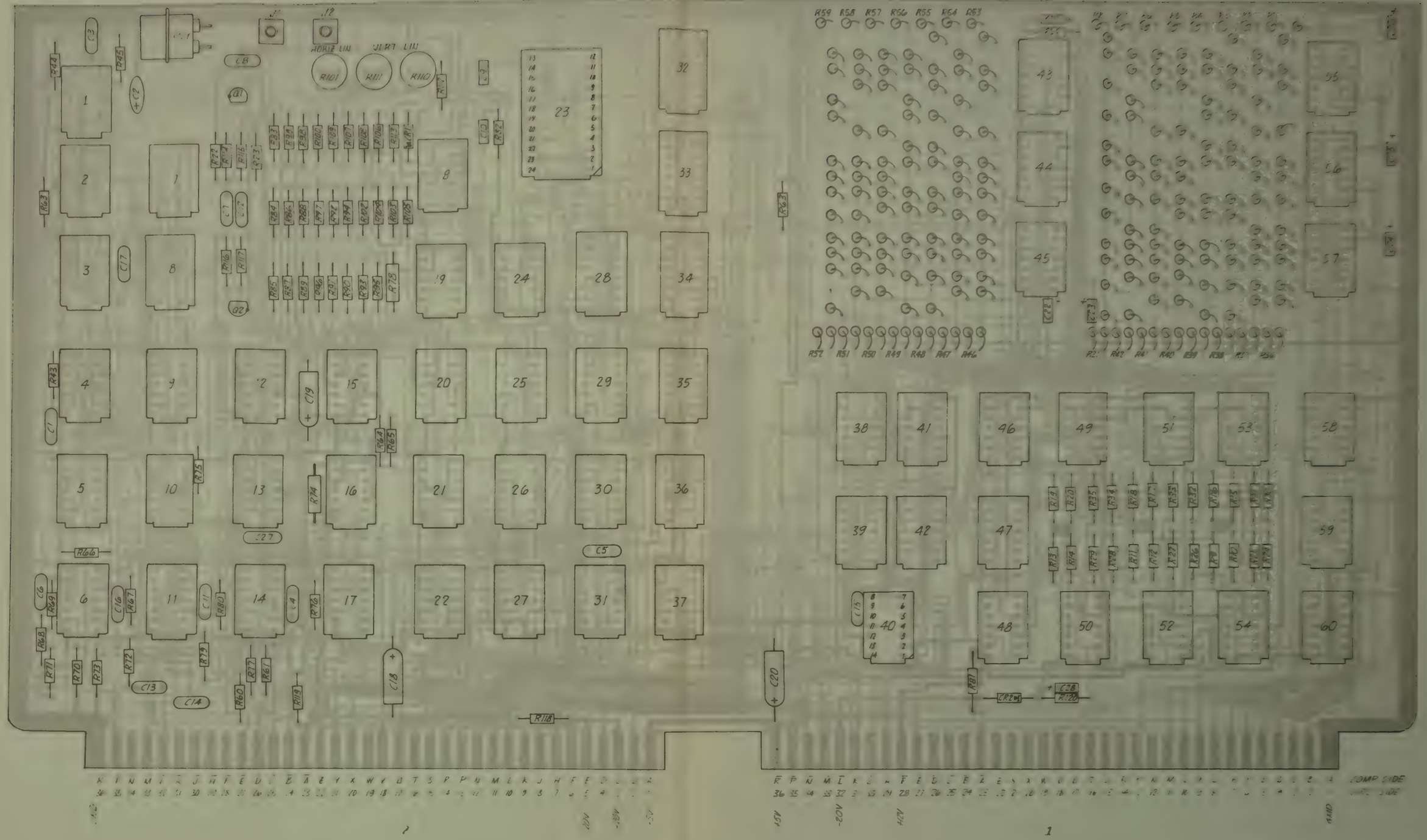

DISPLAY LOGIC A6

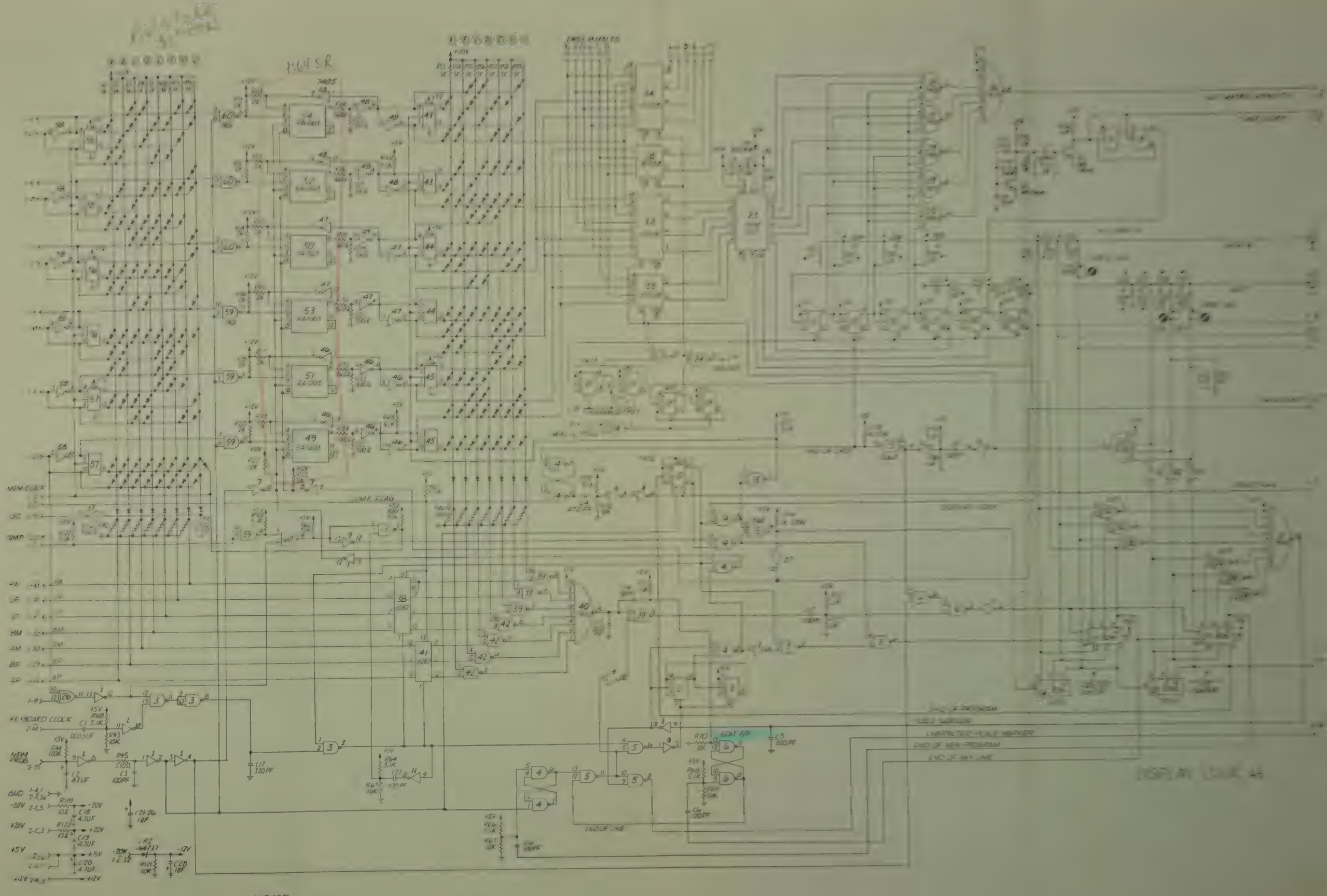
1:64 S.R.
7405
MEM CLOCK
COMP FLAG
KEYBOARD CLOCK
NEW PROG.
GND
-20V
+20V
+5V
+12V
EDIT F/F
END OF LINE
CHARACTER PLACE MARKER
END OF NEW PROGRAM
END OF ANY LINE

D-140-41768E

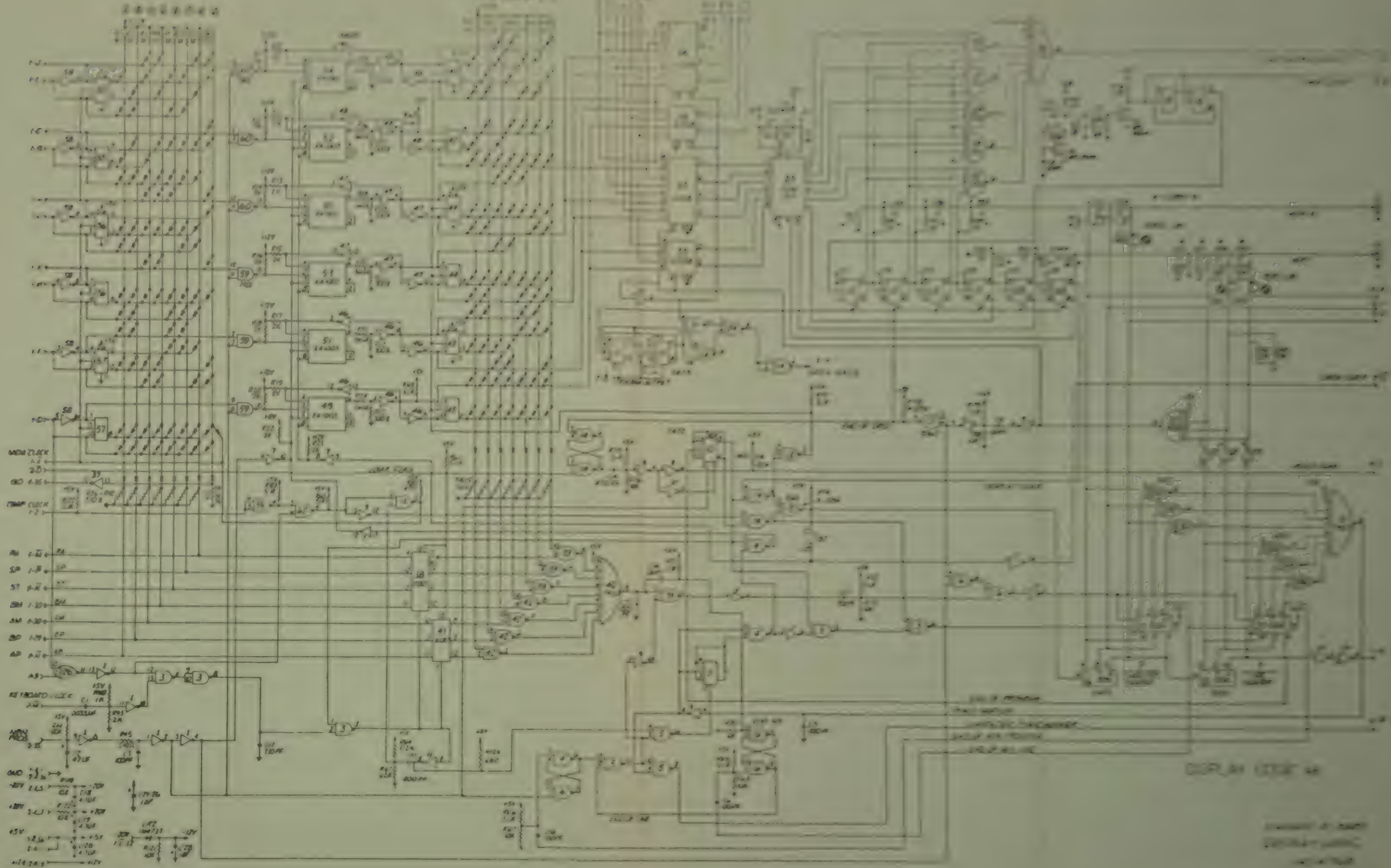

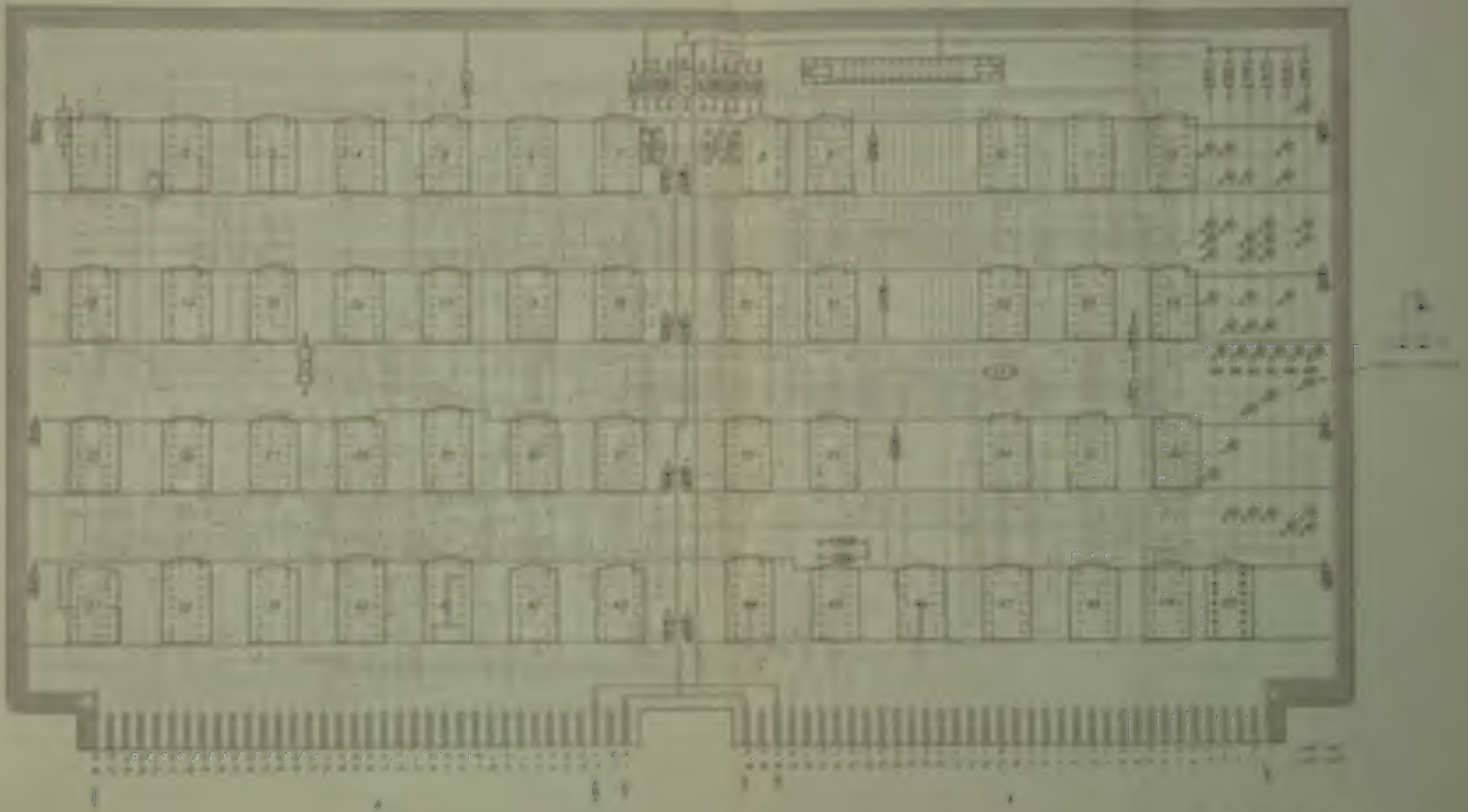

RANGE

CA######

1,2,5 MULT.

RANGE

AP######

MULT.

RANGE

BP######

MULT.

A,B,T

RA######

AVG 10

START

NOTCHED MEAS PERIOD GATE

END OF SWEEP

STOP

SSI

MEAS CLOCK

MEAS GATE RESET

A REF

B REF

7401

NOTES: UNLESS OTHERWISE SPECIFIED.

1. ALL RESISTORS ARE 1/4W 5% CARBON.
2. I.C. ELEMENTS 3,17,19,23,27,32,43,48,49,50 ARE HEX INVERTERS 7404.
3. I.C. ELEMENTS (NAND GATE) ARE 7400.

REF: SCHEMATIC D140-41774 REV D
PC BOARD 400-41773 REV D

© 1971

COUNTER & DIFFERENTIATOR A-1

D-140-41774D

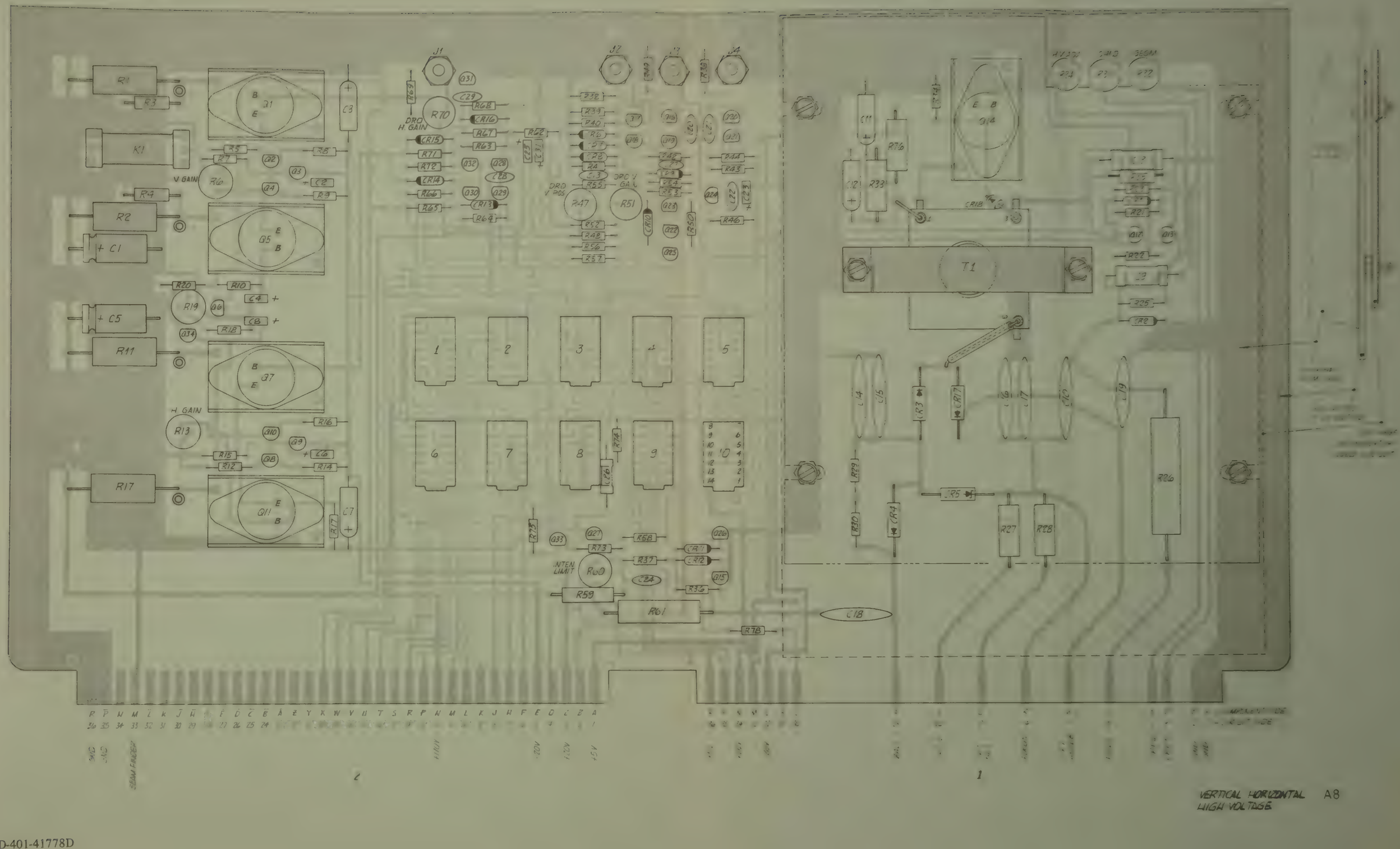
J1
J2
J3
J4
R1
R3
K1
R2
C1
R4
R5
R7
R6
V GAIN
Q1
Q2
Q3
Q4
C2
R8
C3
R20
R19
Q6
Q34
R10
C4
C5
R18
C8
R11
Q7
H GAIN
R13
R16
Q10
Q9
Q8
R15
R12
C6
R14
R17
Q11
C7
R70
DRO H. GAIN
R69
C29
R68
CR16
R67
CR15
R71
R63
R72
C25
C31
R62
R64
R65
Q31
Q32
Q28
C28
Q30
Q29
CR13
R66
R32
R39
R40
R49
R50
R48
R54
R55
R47
R51
DRO V POS
DPC V GAIN
R52
R56
R57
CR10
R50
Q22
Q24
R46
R45
R44
R43
Q23
C22
C23
1
2
3
4
5
6
7
8
9
10
R74
C26
R75
Q33
Q27
R73
R58
R37
INTEN LIMIT
R60
C24
R59
R61
CR11
CR12
Q26
Q25
R36
R78
C18
C11
R76
C12
R33
E B
Q14
CR18
T1
R29
R30
CR4
CR5
R27
R28
R26
C14
C15
CR3
CR17
C16
C17
C19
R22
C13
R25
CR2
Q12
Q13
R21
R24
R23
R22
C9
R25
CR2
R26
P 36
P 35
N 34
M 33
L 32
K 31
J 30
H 29
F 27
E 26
D 25
C 24
B 23
A 22
Y 21
K 20
W 19
V 18
U 17
T 16
S 15
R 14
N 13
M 12
L 11
K 10
J 9
H 8
F 7
E 6
D 5
C 4
B 3
A 2
SYNC
GND
BEAM FINDER
+10V
+12V
+15V
GND
GND
2
1
VERTICAL HORIZONTAL
HIGH VOLTAGE
A8

D-401-41778D

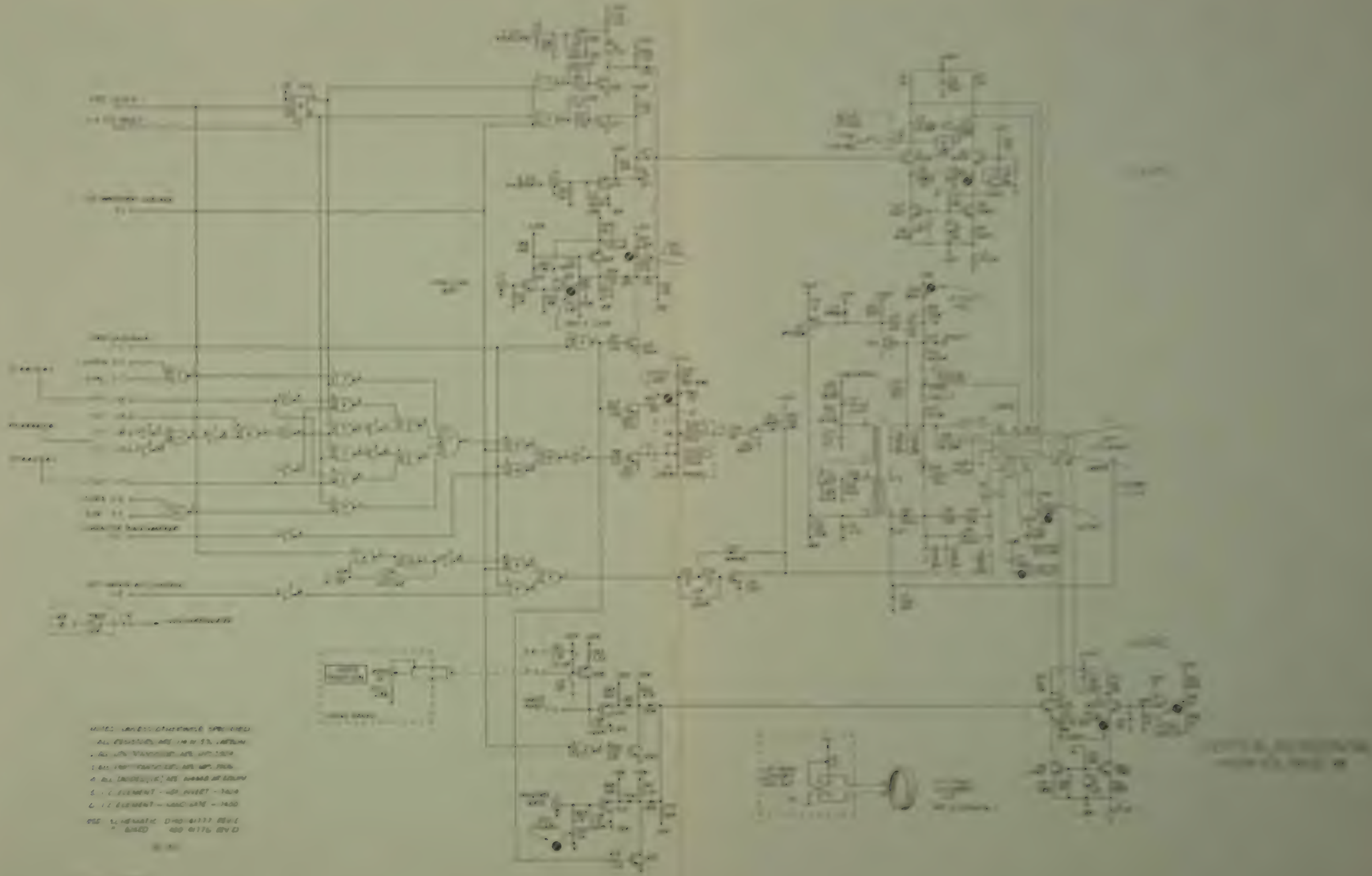

D-140-41777E

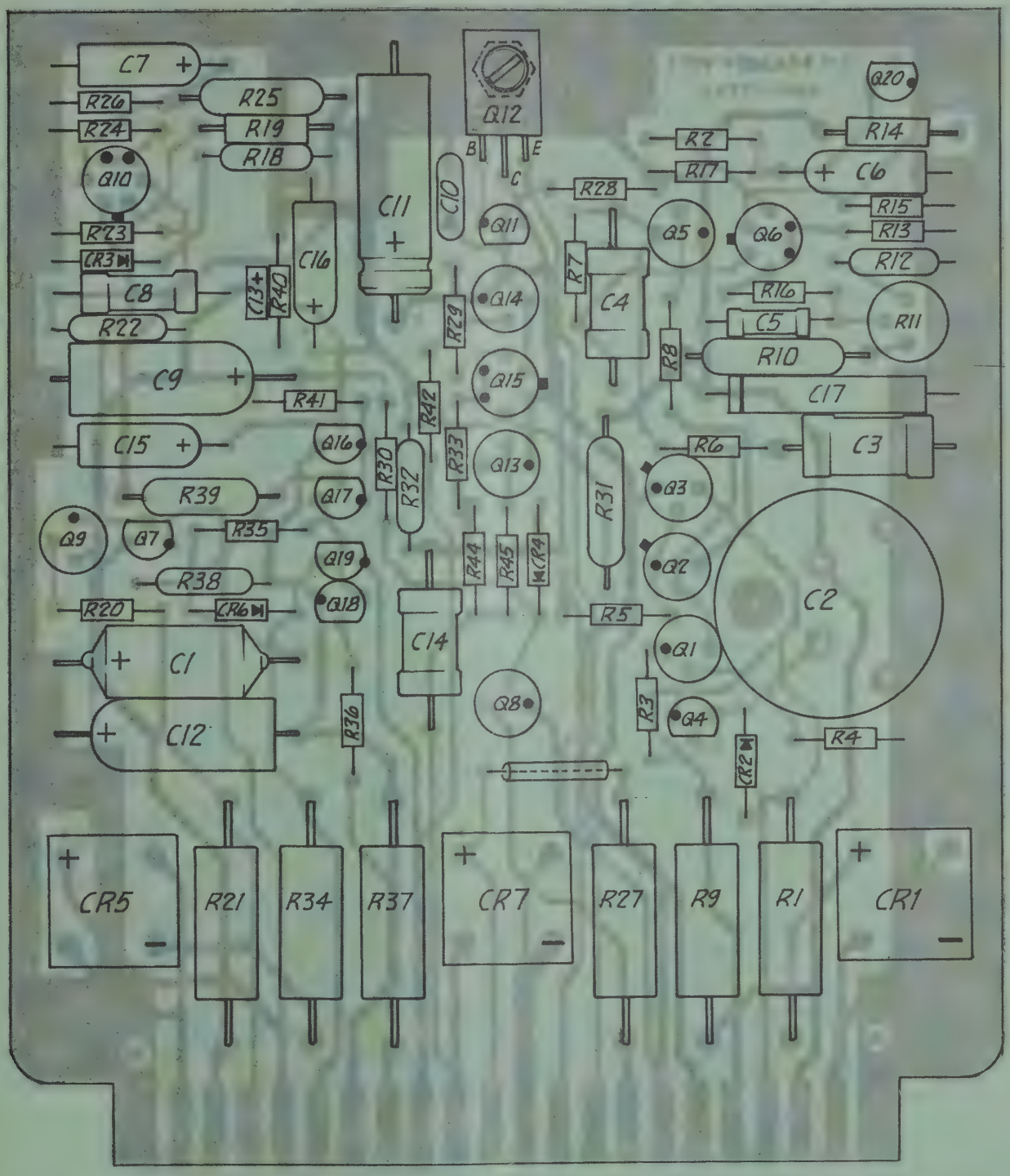

Z	Y	X	W	V	U	T	S	R	P	N	M	L	K	J	H	F	E	D	C	B	A	
22	21	20	19	18	17	16	15	14	13	12	11	10	9	8	7	6	5	4	3	2	1	COMP SIDE / CIRC SIDE
GND		+20V				-20V										+5V			+170V		GND	

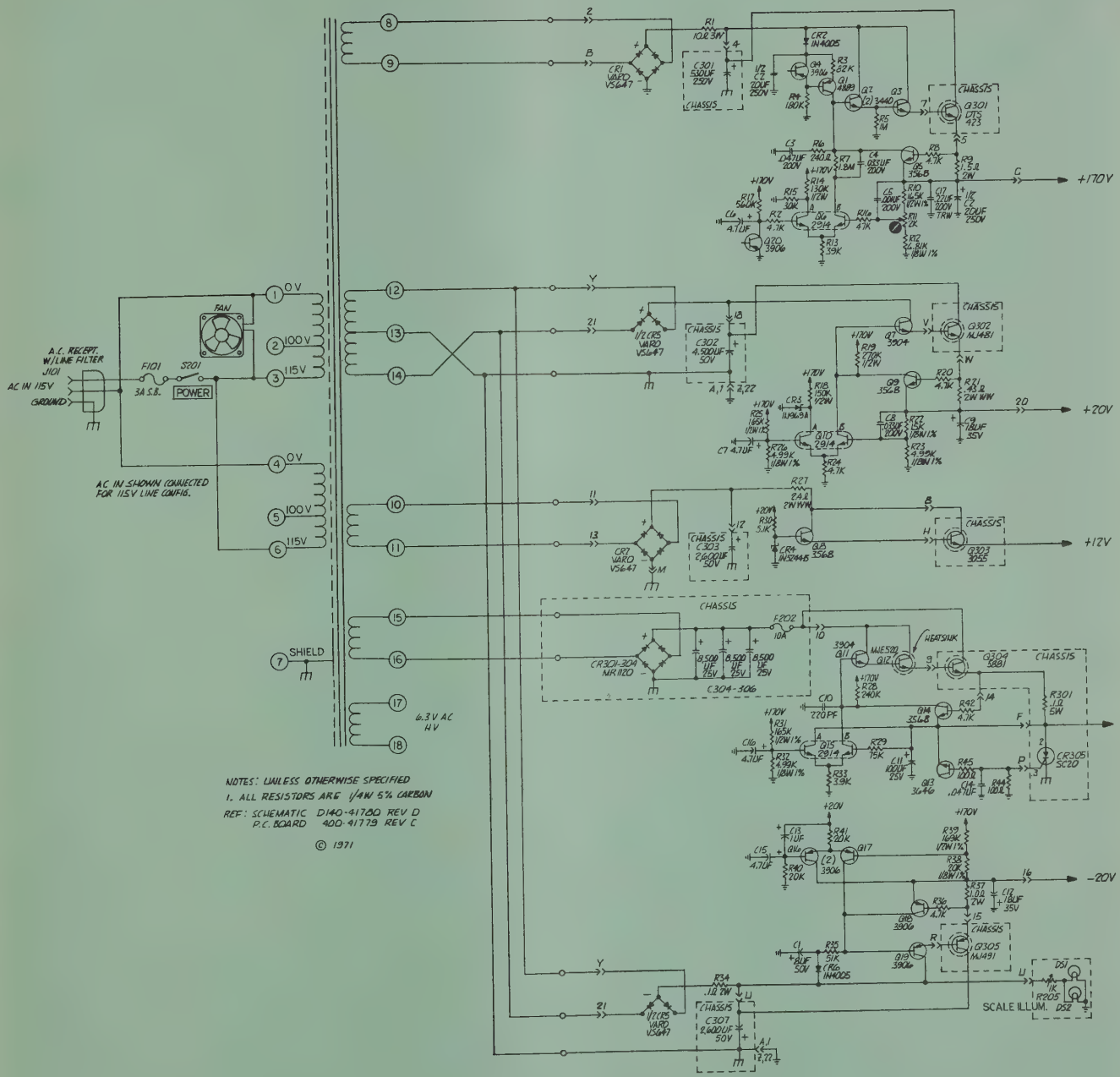
A.C. RECEPT. W/LINE FILTER J101
AC IN 115V
GROUND
FAN
F101 3A S.B.
S201 POWER
0 V
100 V
115V
AC IN SHOWN CONNECTED FOR 115V LINE CONFIG.
SHIELD
6.3 V AC HV
+170V
+20V
+12V
+5V
-20V
SCALE ILLUM.
CHASSIS
NOTES: UNLESS OTHERWISE SPECIFIED
1. ALL RESISTORS ARE 1/4W 5% CARBON
REF: SCHEMATIC D140-41780 REV D
P.C. BOARD 400-41779 REV C
© 1971

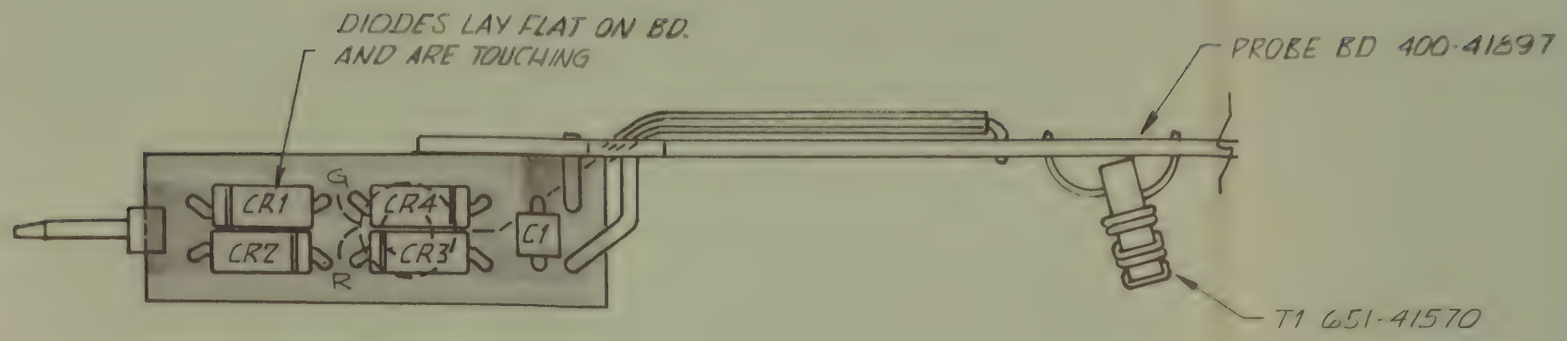

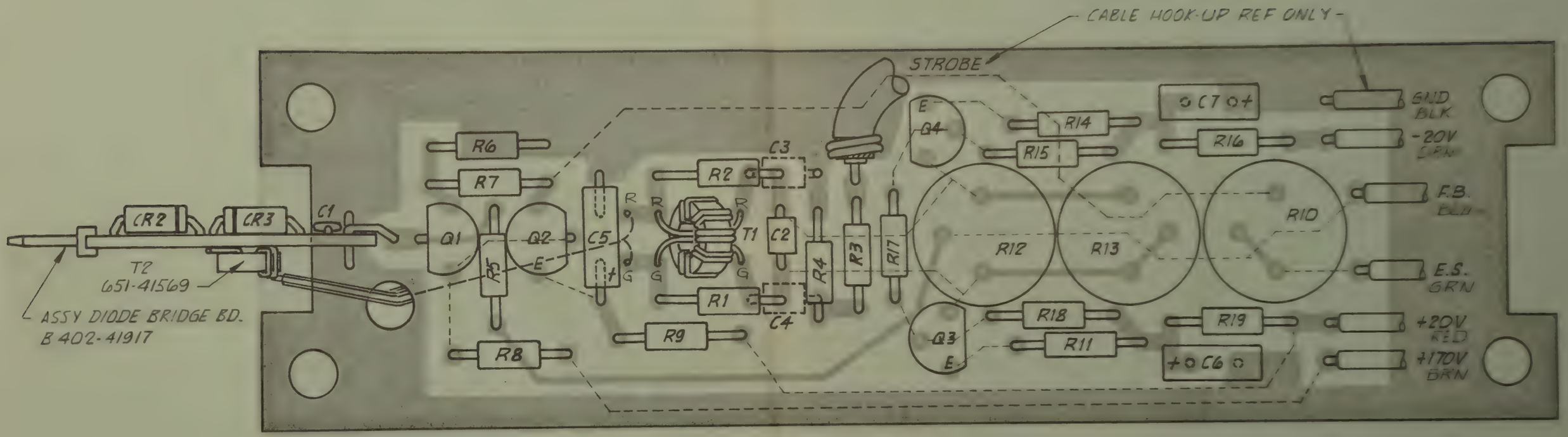

C-402-41899A

ASSEMBLY P.C BOARD
PROBE

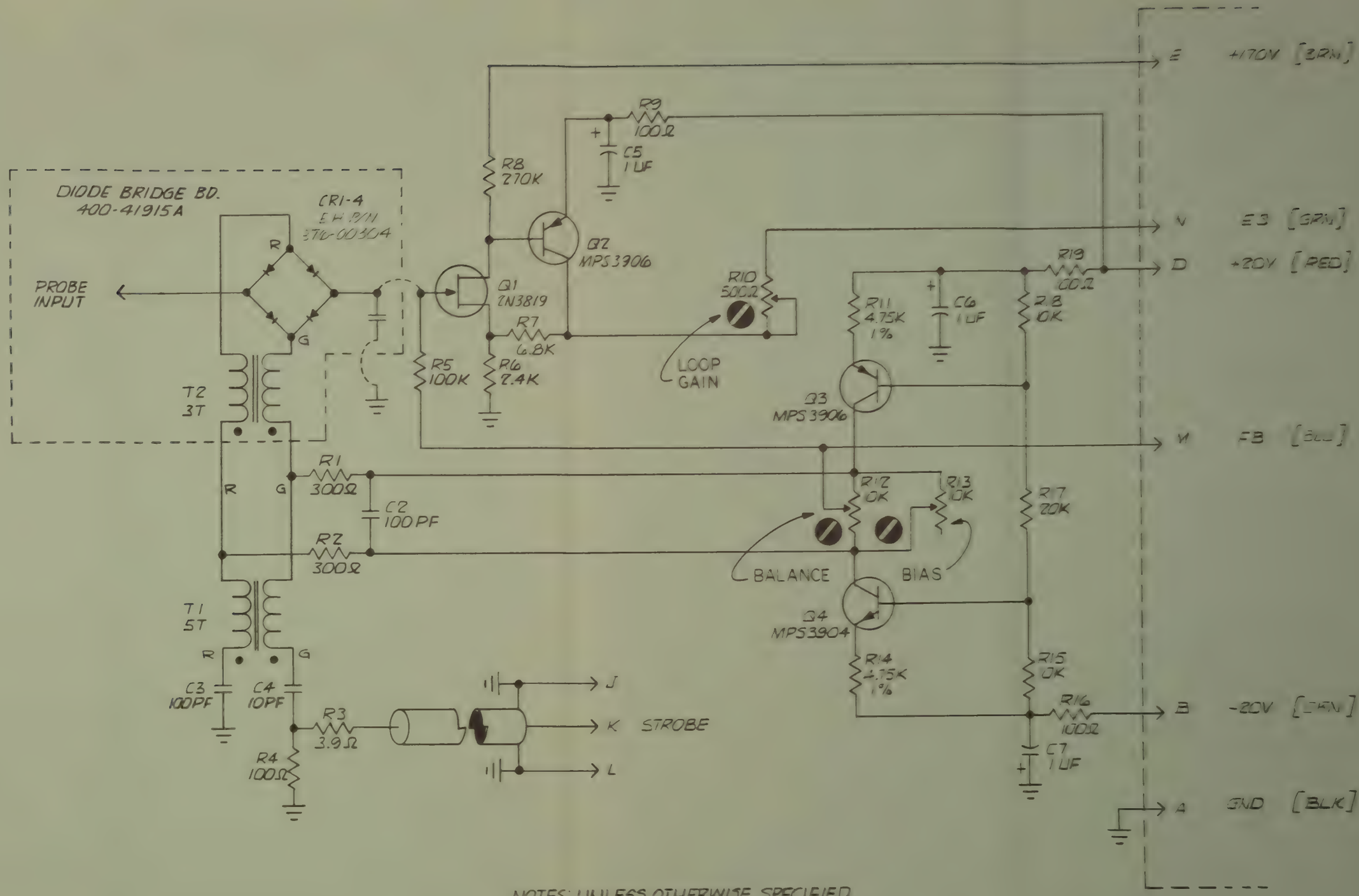

NOTES: UNLESS OTHERWISE SPECIFIED

1. ALL RESISTORS ARE 1/8W 5% CARBON.

REF: SCHEMATIC C140-41898 REV A
P.C. BOARD 400-41897 REV A

© '71

SCHEMATIC
REMOTE SAMPLING UNIT
TYPE 941

C-140-41898A

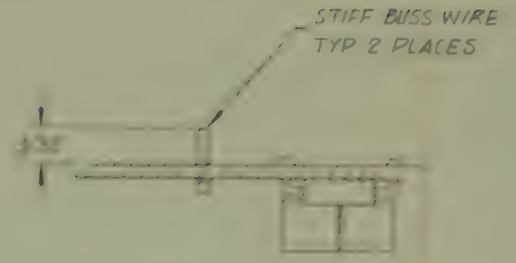

SURFACE SOLDER BUSS WIRE TO RELAY
TYPICAL 4 PLACES

CLIP 3 UNUSED LEADS CLOSE TO CAN
COVER CUT LEADS WITH SCOTCH TAPE
TO PREVENT SHORT TO GROUND

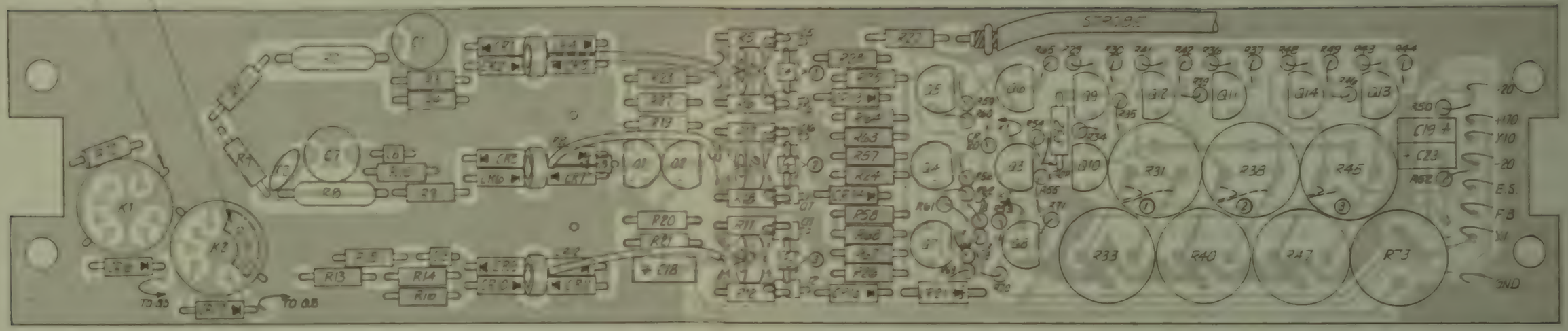

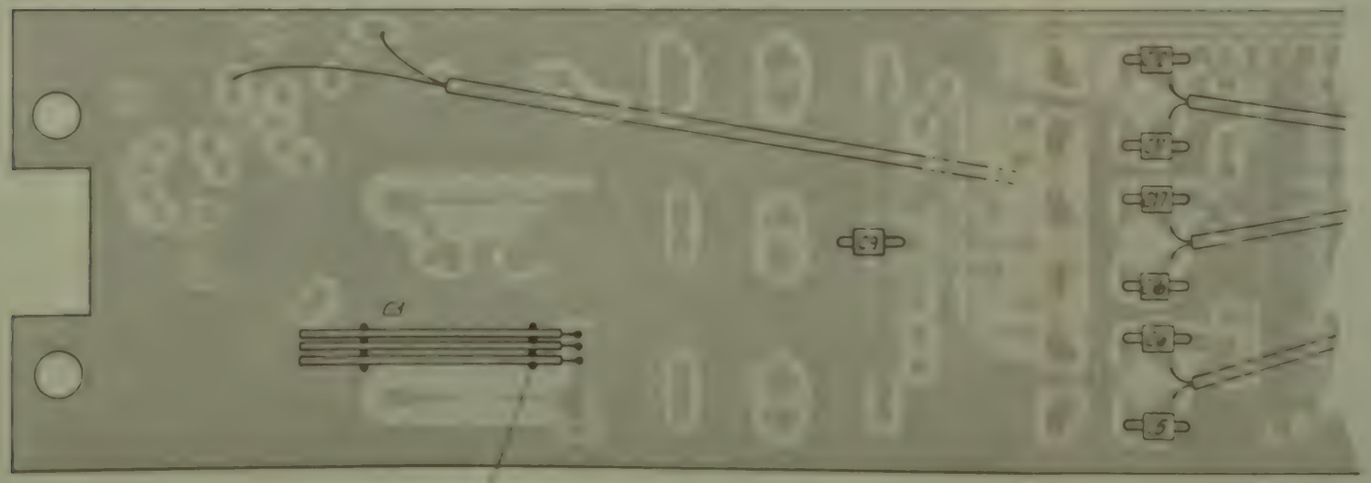

JSSY P.C. BOARD
REMOTE SAMPLING UNIT
TYPE 942

D-402-41980A

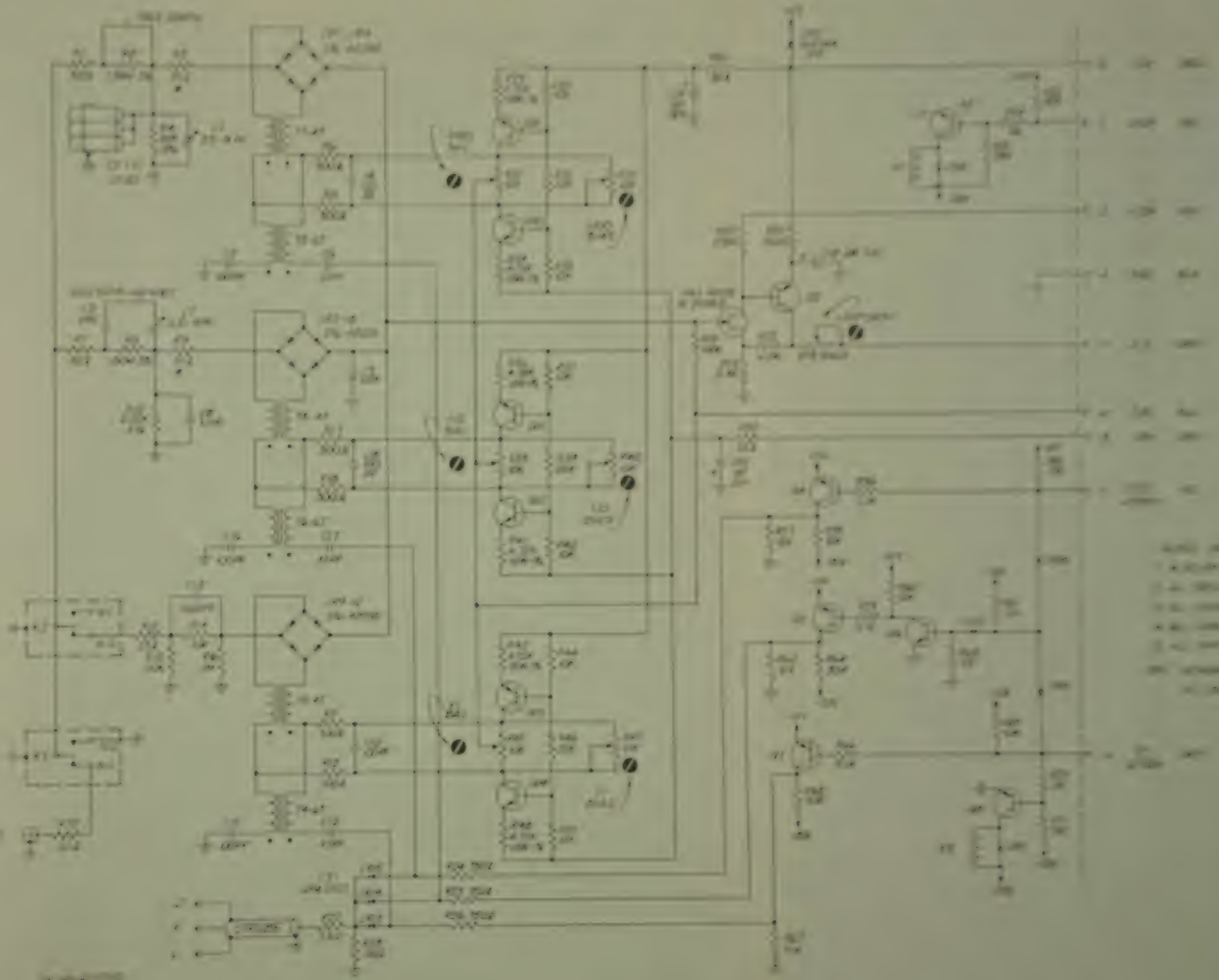

E-H RESEARCH LABORATORIES, INC.

PULSE ACCESSORIES

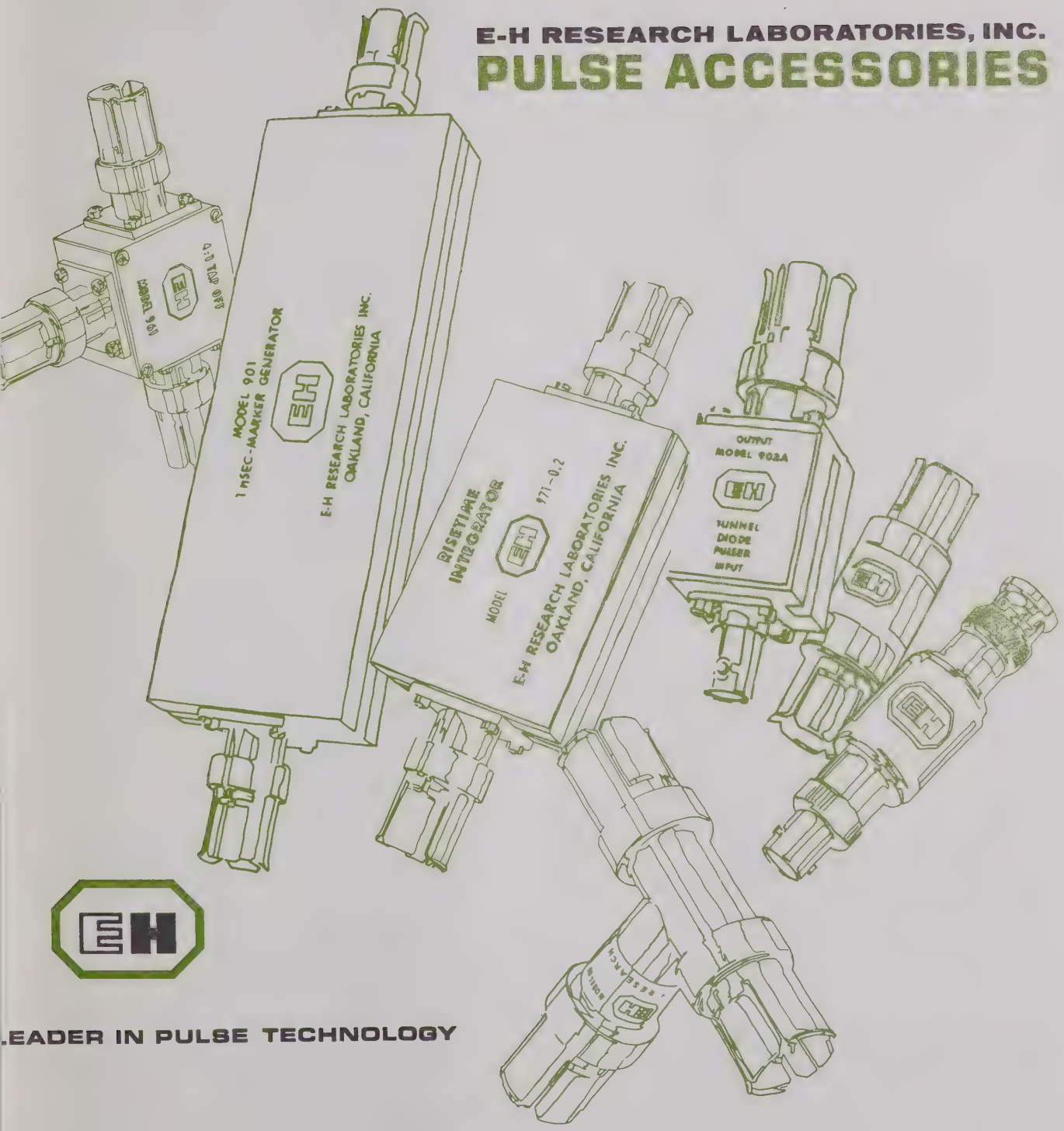

LEADER IN PULSE TECHNOLOGY

model 901 MARKER GENERATOR

The Model 901 Marker Generator is designed to convert a fast risetime voltage step into a train of time markers spaced precisely 1 nanosecond apart. The voltage output is proportional to the second time derivative of the leading edge of the input pulse.

SPECIFICATIONS

Marker Period . . . . . 1 nanosecond

Input Pulse Requirements . . . . . approx. 100 ps risetime; pulse width greater than total markers to be used.

Marker Accuracy . . . . . ±0.3% non-cumulative from one marker to the next. Marker intervals are measured from either the peaks or the crossover point. Accuracy of ±0.1% is available on request.

Output Termination . . . . . 50 ohms

Input Termination . . . . . 50 ohms

Maximum Input Power . . . . . 0.1 watt minimum average

Attenuation Factor . . . . . each marker's amplitude is approximately 1 dB down from previous marker.

model 902A TUNNEL DIODE PULSER

The Model 902A contains a tunnel diode mounted in a high-frequency strip-line and supplies a 450 millivolt output with a risetime less than 100 picoseconds. This device may be driven with any period function such as a sine wave, square wave, ramp, etc. The Model 902A requires no power source other than its drive input.

SPECIFICATIONS

Polarity . . . . . negative; positive on request

Pulse Distortion . . . . . less than 10% (typically 5%)

Minimum Input Amplitude . . . . −5 volts peak into 50 ohms

Maximum Peak Voltage Input . . . . . 15 volts

model 960 100:1 TAP-OFF

The Model 960 is a unique accessory in our product line: it is now possible to terminate a pulse system into 50 ohms and still observe the waveform without using the 50-ohm input impedance of the sampling oscilloscope as the load. This permits a 1 A pulser to be terminated with an adequate load, and still allows the pulse waveform to be observed without introducing distortion into the system.

The 960 has a risetime of 100 ps which is adequate for use with fast risetime pulsers such as the E-H Model 125A. With the advent of the 125A pulse generator and the 960 tap-off, an effective time domain reflectometry system may be set up with the use of the sampling scope.

SPECIFICATIONS

Risetime Input to Sidearm . . . . . less than 100 ps

Distortion Introduced Input to Output . . . . . less than 2%

Tap-Off Ratio . . . . . 100:1, ±3% into matched sidearm

Tap-Off Termination . . . . . oscilloscope connection must be terminated in 50 ohms for 100:1 ratio

Tap-Off Arm Distortion . . . less than 2% on 300 ps time scale
less than 6% on 100 ps time scale

Duty Cycle . . . . . 25% at 50 volts

Connectors . . . . . General Radio Type 874

model 961 *TDR TAP-OFF*

The 961 TDR Tap-Off is a 50-ohm line-sampling device designed to be used for time-domain reflectometry with the E-H Model 125A Pulse Generator. It delivers a 6 volt 300 ps step to the device under test with a 4:1 monitor tap-off ratio.

SPECIFICATIONS

Risetime Input to Sidearm ..... less than 300 ps

Distortion Introduced Input to Output ..... less than 2%

Input to Output Ratio ..... 1.66:1 ±5% (10–6)

Tap-Off Ratio ..... 4:1 ±5% (output to arm)

Tap-Off Termination ..... .50 Ωscope input impedance forms the completion of arm

Tap-Off Arm Distortion ..... less than 2% on 300 ps time scale

Duty Cycle ..... 10% at 10 V, maximum

961

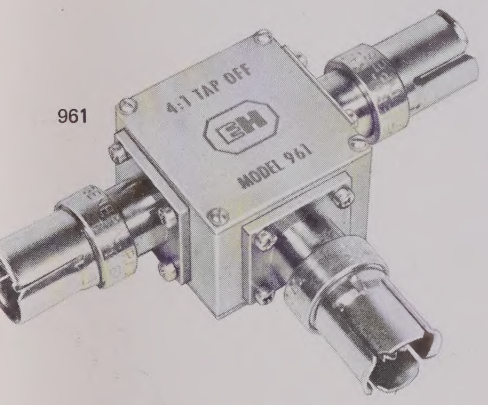

971

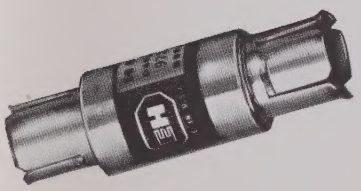

972

model 971 *RISETIME INTEGRATOR*

The Model 971 is a precision 50-ohm strip-line low-pass filter which is a useful pulse generator accessory for integrating fast-rising pulses to slower, precisely known, rise and fall times.

The Model 971 is made up of four half-section constant-k low-pass filters and is balanced so that either port may be used as an input. The specified risetime of the device is dependent on having an input much faster than its output risetime. A general rule would be to require the input to be ten times faster than the specified output. For inputs that do not meet this requirement, the resultant output risetime is equal to the square root of the sum of the squares of the input pulse risetime plus the risetime of the Model 971.

SPECIFICATIONS

Input Pulse Polarity ..... positive or negative

Risetime ..... 0.2 ns, 0.5 ns,1 ns, 2 ns and 5 ns

Accuracy ..... ±10% from 10% to 90% points with an input ten times faster than the specified output risetime.

Overshoot ..... less than 5%

model 972 *PULSE TRANSFORMER*

The Model 972 is a 50-ohm to 50-ohm inverting transformer which has an extremely fast risetime. The 972 was designed primarily to invert the 120E pulse generator output but will find many other useful applications in pulse work, such as dc isolation, and matching which requires 1:1 impedance ratios.

SPECIFICATIONS

Risetime ..... less than 0.25 ns

Distortion ..... 5% on a 300 ps time base

Pulse Width ..... maximum 1 μs at 10 V with 37% droop.

model DT *DC RESTORER*

This diode device eliminates baseline shift in ac-coupled, nanosecond-pulse systems. The Model DT clamps to 0 volts.

SPECIFICATIONS

Peak Input	20 V
Attenuation	approximately 10%
Uses	DTP for positive pulses, DTN for negative pulses.

model RT *RISETIME INTEGRATOR*

This device is used to produce known, repeatable, fixed times from a fast pulse input.

SPECIFICATIONS

Standard Times	5, 10, 20, 50, 100 ns (special times available on request)
Accuracy	±10%
Maximum Average Input	500 mA
Connectors	BNC

Specify risetime when ordering (e.g., RT-10 = 10 ns).

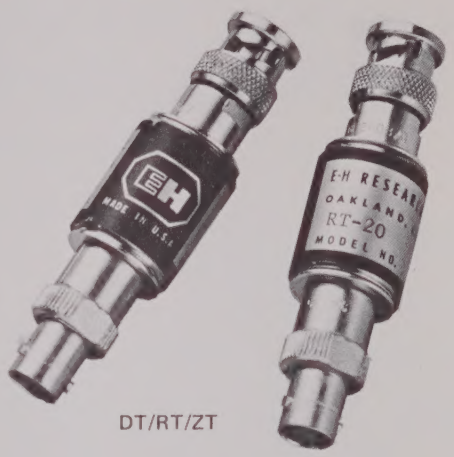

DT/RT/ZT

model ZT *PULSE TRANSFORMER*

This nanosecond transformer is used for impedance matching or inversion. Impedances of 50, 93, 125, 185, or 200 ohms are available. Any combination input to output with or without inversion can be accomplished. BNC connectors are provided.

ORDERING INFORMATION FOR THE MODEL ZT

Input Impedance: specify first digit if below 100 ohms or first two digits if 100 ohms or above.

Output Impedance: same as above.

Inversion: if inversion is required add an X at the end of the model number.

Example: Model ZT-5-20X: 50 ohms input impedance; 200 ohms output impedance; inverted output.

E-H RESEARCH LABORATORIES, INC.

515 11th Street □ Box 1289, Oakland, California 94604 □ (415)834-3030 □ TWX 910-366-7258
In Europe: E-H Research Laboratories (Ned) B.V., Box 1018, Eindhoven, The Netherlands, Telex 51116
In Japan: E-H International — Tokyo Branch, 1-5, 3-Chome, Naka-cho, Musashino-shi, Tokyo, Japan □ 0422-54-9261

TP5M/PA1272

Prices and technical data subject to change without notice — All prices F.O.B. Oakland, California

www.manualsplus.com
1020373